JBG 2®

PRODUCER OF PROFESSIONAL REFRIGERATION EQUIPMENT

REMOTE
COLLECTION

D - cooling, fan-assisted unit
N - freezing, fan-assisted unit
S - cooling, static unit
M - freezing, static unit
G - hot cases

[module]
length

Gerlach **RDG**-[module]-**L2**

name
of the product range

L - counter
R - multideck
S - cabinet
W - island
M - mix cabinets

first letter
of the name
of the product
range

L2 identifies
the model

Table of contents

COUNTERS

Grazia	LDG-[module]-04	5
Grazia	LDG-[module]-07	7
Grazia	LDG-[module]-27	9
Lhotse	LDL-[module]-06	11
Lhotse	LDL-[module]-07	13
Lhotse	LDL-[module]-07 Swing Glass	15
Lhotse	LDL-[module]-27	17
Lhotse	LDL-[module]-37	19
Lhotse	LDL-[module]-37 Slide Up	21
Lhotse	LDL-[module]-09	23
Lhotse	LDL-[module]-12/16	25
Lhotse	LSL-[module]-11	27
Lhotse	LDL-[module]-13	29
Mana	LDM-[module]-37	31
Holland	LDH-[module]-01/02/03/04	33
Holland	LDH-[module]-05/07/13	35
Holland	LDH-[module]-06/15/16	37

MULTIDECKS

Gerlach	RDG-[module]-L2/L3/L4	41
Gerlach	RDG-[module]-H2/H3/H4	43
Gerlach	RDG-[module]-L3z/H3z	45
Kaukaz	RDK-[module]-11/14/15	47
Kaukaz	RDK-[module]-16/17	49
Himalaya	RDH-[module]-L2/L3/L4	51
Himalaya	RDH-[module]-H2/H3/H4	53
Tarcoola	RDT-[module]-L2/L3/L4	55
Tarcoola	RDT-[module]-M2/M3/H1	57
Iberg	RDI-[module]-L2	59
Olimp	RDO-[module]-H1/H2	61
Laki	RDL-[module]-M1	63
Panama	RDP-[module]-03	65
Panama	RDP-[module]-07	67
Parma	RDP-[module]-H2	69
Parma	RDP-[module]-L1/H1	71
Retro Banco	RDB-[module]-H3	73

SEMI VERTICAL MULTIDECKS

Andy	RDA-[module]-11/32	77
Andy	RDA-[module]-15/22/23	79
Andy	RDA-[module]-16/17/18	81
Andy	RDA-[module]-24/25	83
Andy	RDA-[module]-13/28	85
Andy	RDA-[module]-26	87
Elegant	RDE-[module]-24	89

ISLANDS

Superstructure		93
Everest	WNE/WDE-[module]-01/02	95
Everest	WNE/WDE-[module]-03	97
Everest	WNE/WDE-[module]-06	99
Everest	WNE/WDE-[module]-07	101
Everest	WNE/WDE-[module]-08	103
Idea	WNI/WDI-[module]-04	105
Everest	WNI/WDI-[module]-05	107

CABINETS and MIX CABINETS

Arctic	SNA/SDA-[module]-L/H	111
Mix	MNX/MDX-[module]-L1/H1	113
Mix	MNY-[module]-L2/H2	115

INDEX 116

REMOTE

Counters

We focus not only on the display of the product, but also ergonomic and multifunctional use. We have created better conditions for product storage, easier cleaning and flexibility in changing the product from with service to self-service.

Grazia

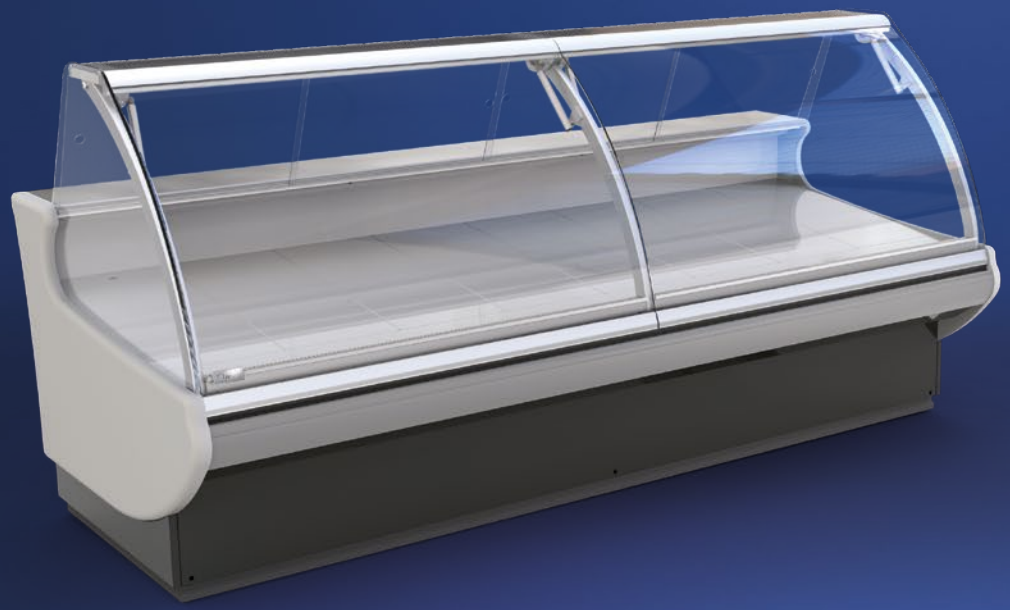

REMOTE

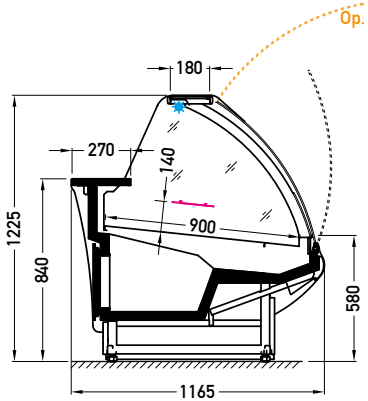

LDG-04

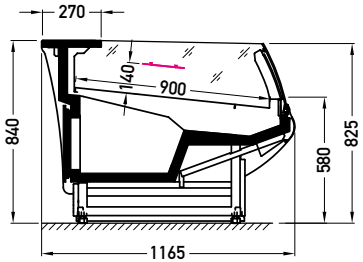

LDG-04

corners			NZ45	NZ90	NW45	NW90	
modules	0.938	1.25	1.562	1.875	2.188	2.5	3.75

Grazia

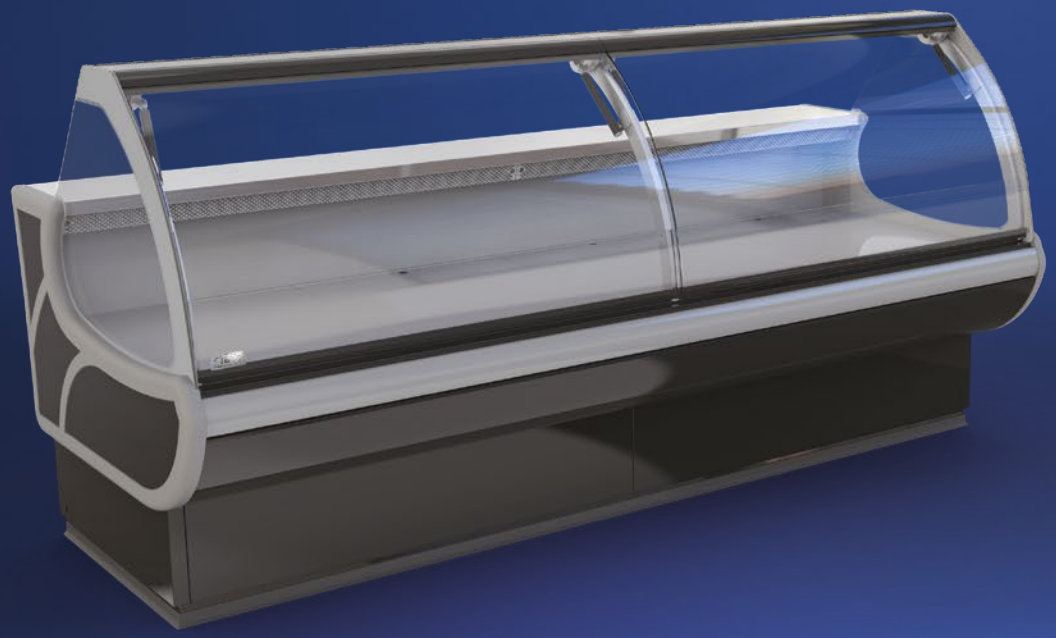

REMOTE

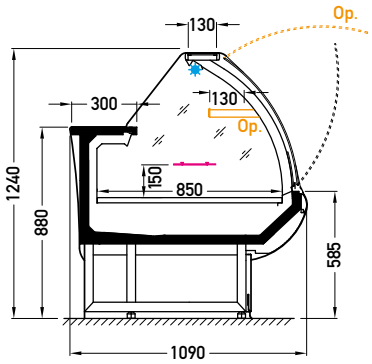

LDG-07

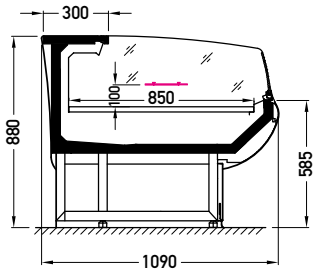

LDG-07

modules

1.25 1.425 1.625 1.925 2.5 3.75

Grazia

REMOTE

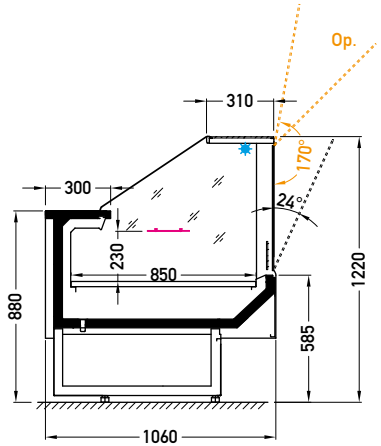

LDG-27

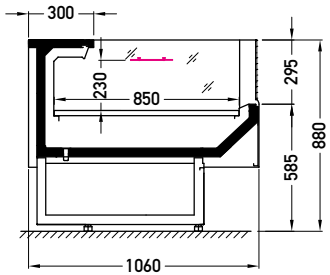

LDG-27

modules

1.25 1.425 1.625 1.925 2.5 3.75

Lhotse

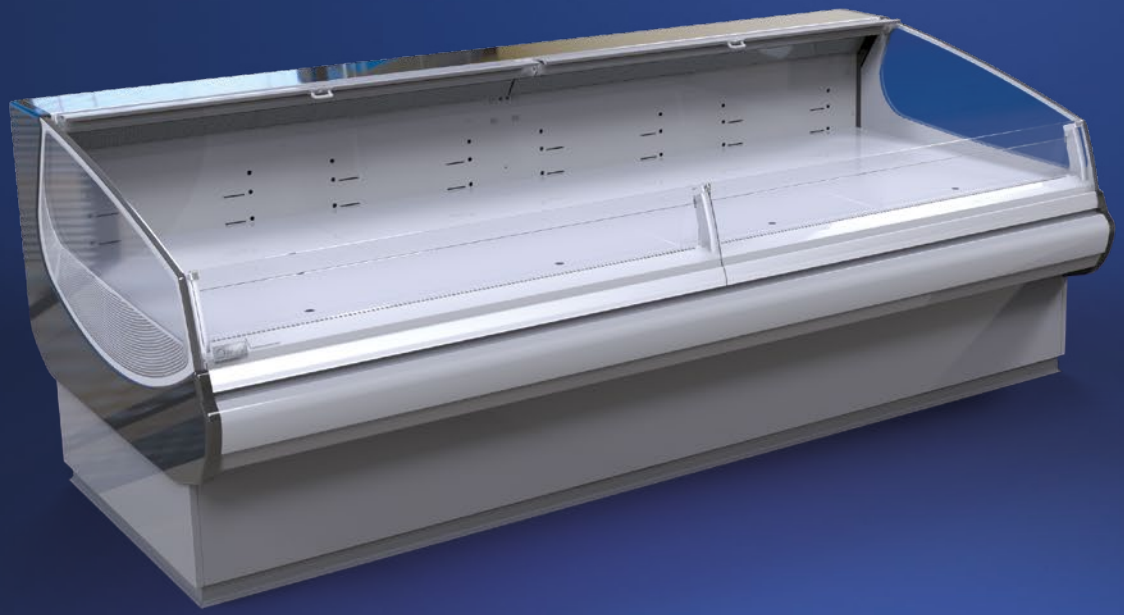

REMOTE

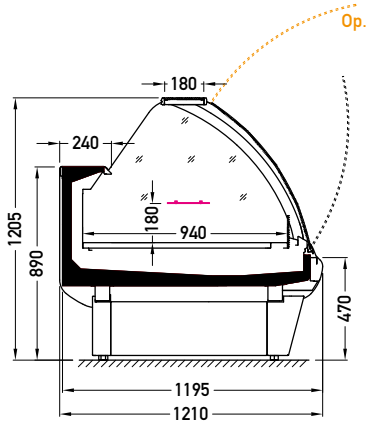

LDL-06

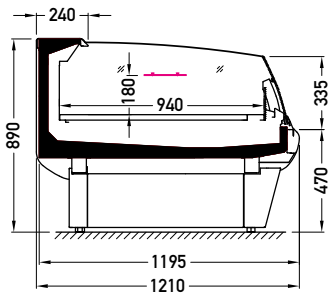

LDL-06

NZ45 NZ90 NW45 NW90

1.25 1.875 2.15 2.5 3.75

Lhotse

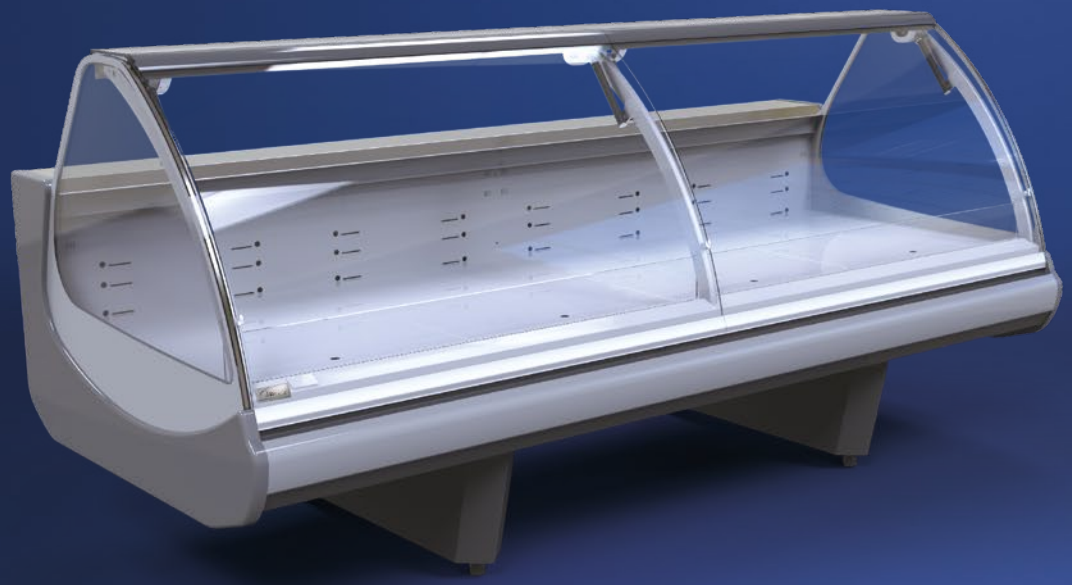

REMOTE

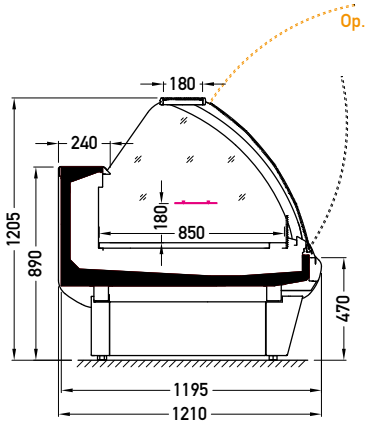

LDL-07

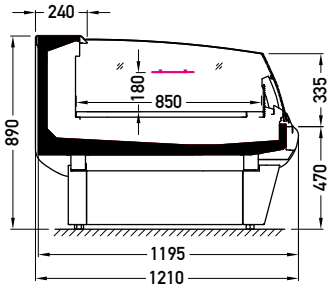

LDL-07

	NZ45	NZ90	NW45	NW90		
corners						
modules	0.938	1.25	1.875	2.15	2.5	3.75

Lhotse

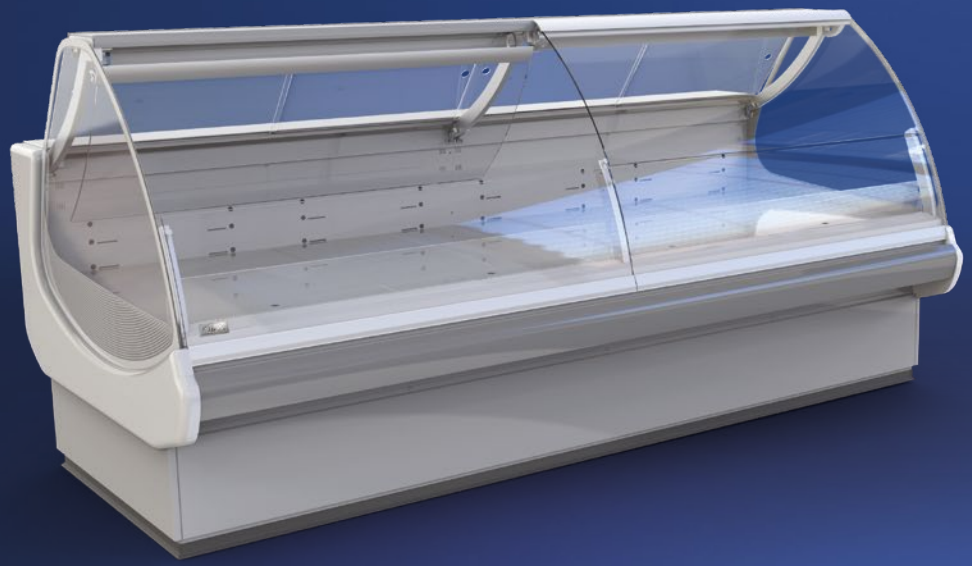

REMOTE

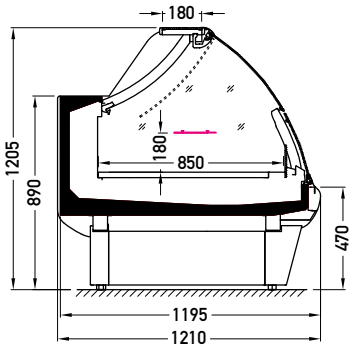

LDL-07

modules

1.25 1.875 2.15 2.5 3.75

Lhotse

REMOTE

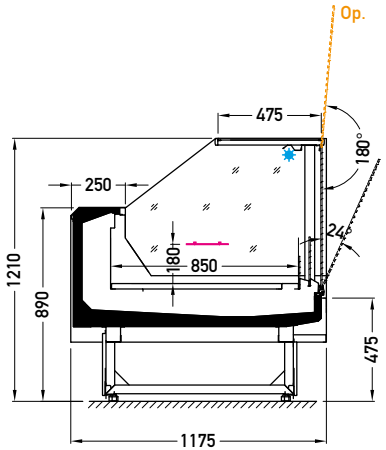

LDL-27

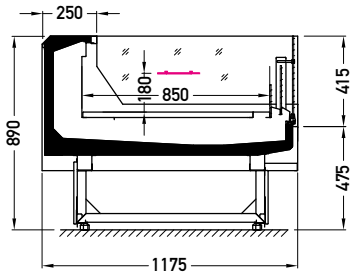

LDL-27

	NZ45	NZ90	NW45	NW90
corners				
modules	0.938	1.25	1.875	2.15	2.5	3.75

Lhotse

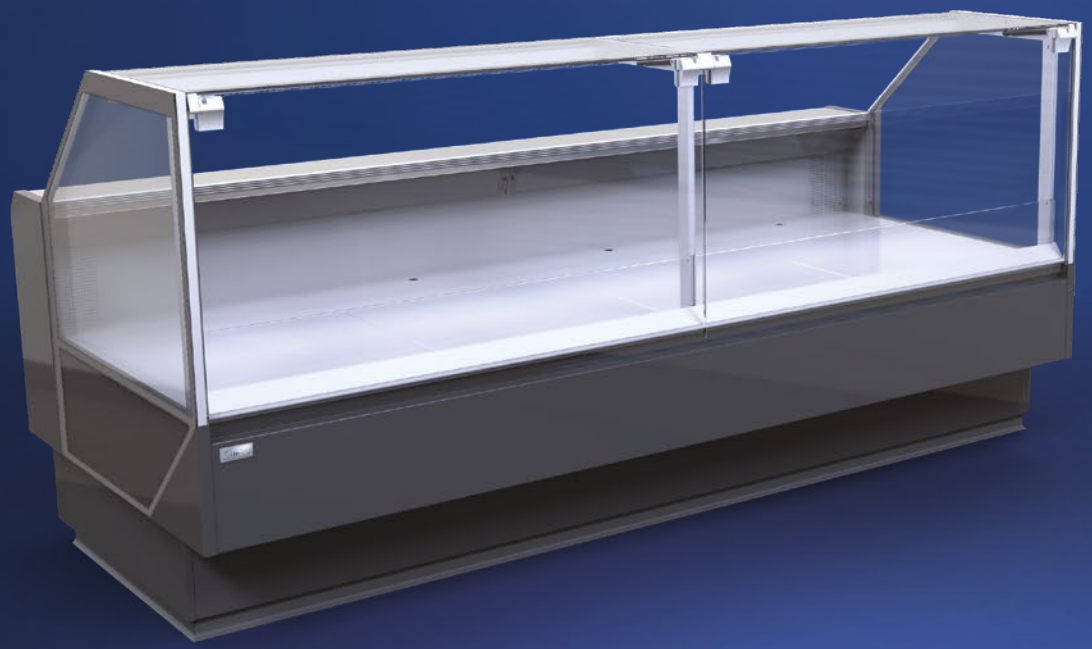

REMOTE

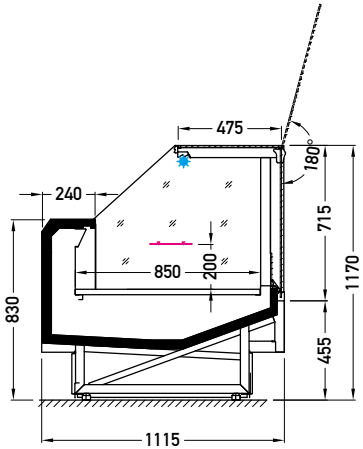

LDL-37

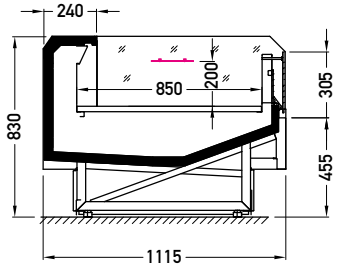

LDL-37

	NZ45	NZ90	NW45	NW90
0.938	1.25	1.875	2.15	2.5	3.75

Lhotse

REMOTE

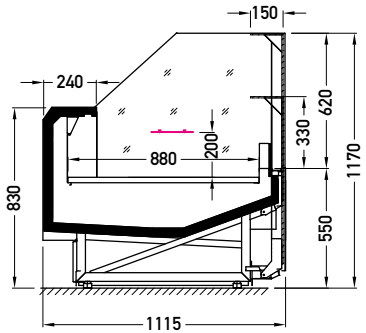

LDL-37

modules

1.25 2.5 3.75

Lhotse

REMOTE

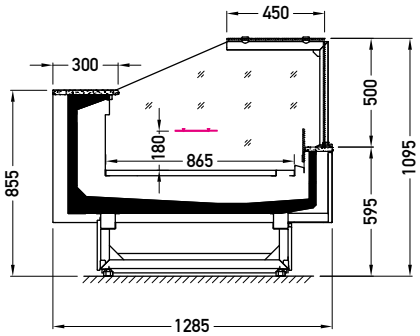

LDL-09

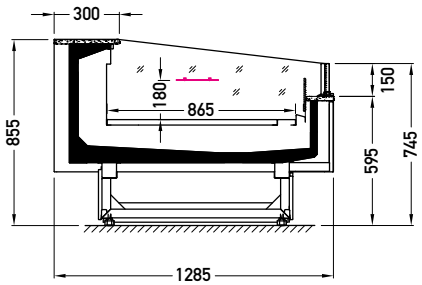

LDL-09

NZ45 NW45

0.75 0.938 1.25 1.875 2.5 3.75

corners

modules

Lhotse

REMOTE

The picture shows LDL-2.5-16

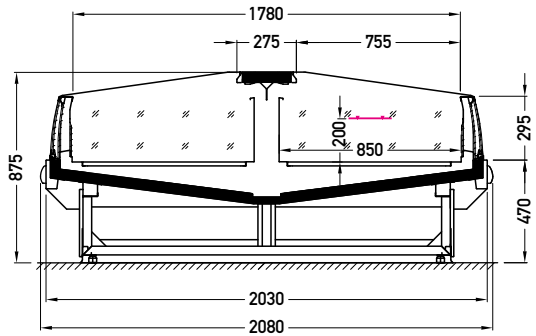

LDL-12

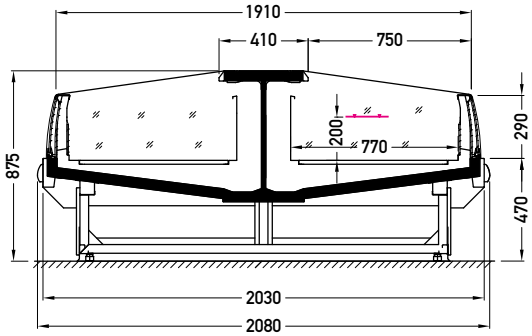

LDL-16

modules	LDL-12		1.875	2.5	3.75	G1
modules	LDL-16	1.25	1.875	2.5	3.75	G1

Lhotse

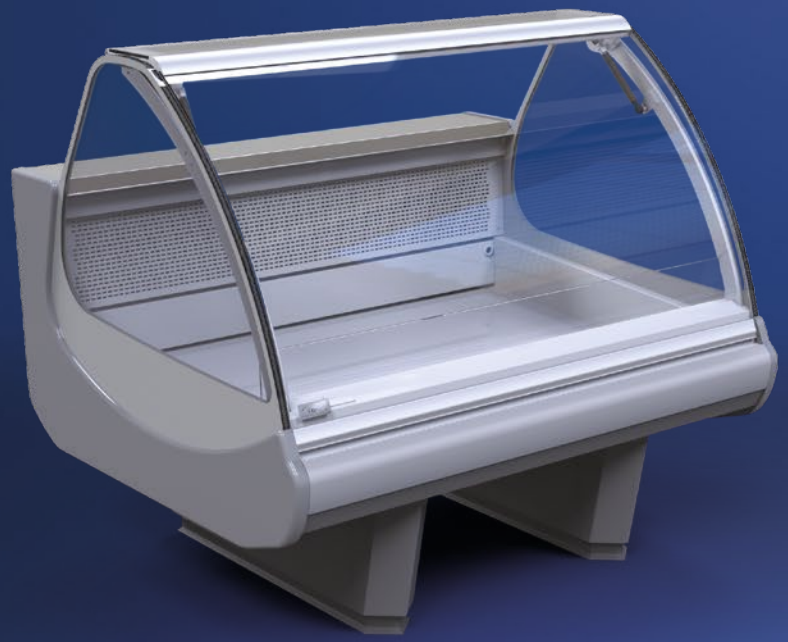

REMOTE

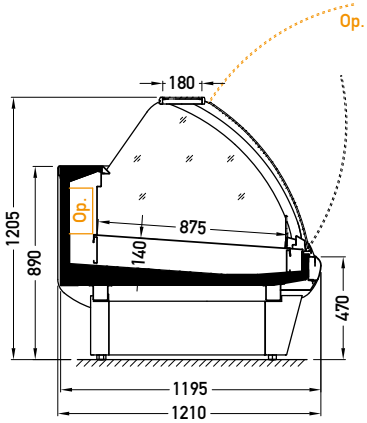

LSL-11

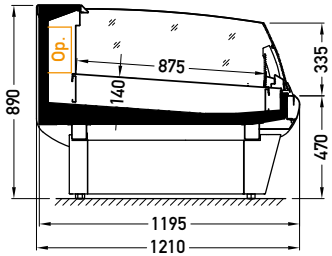

LSL-11

Lhotse

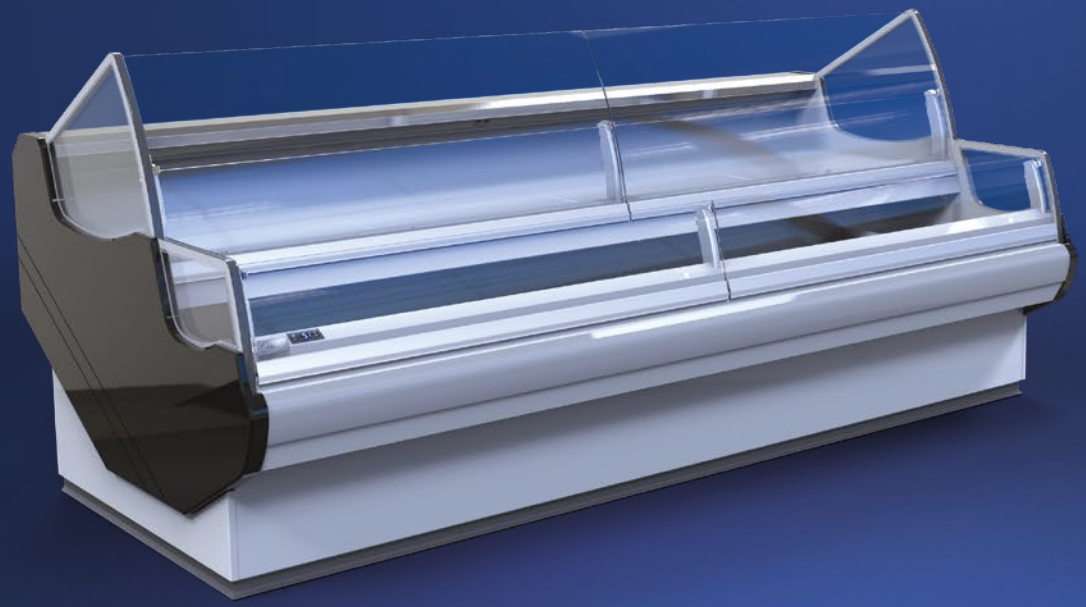

REMOTE

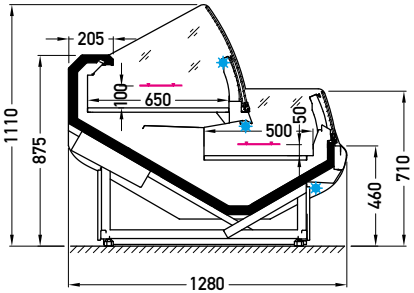

LDL-13

modules

1.875 2.5 3.75

Mana

REMOTE

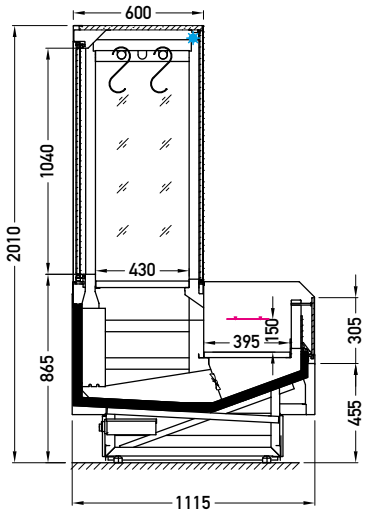

LDM-37

Holland

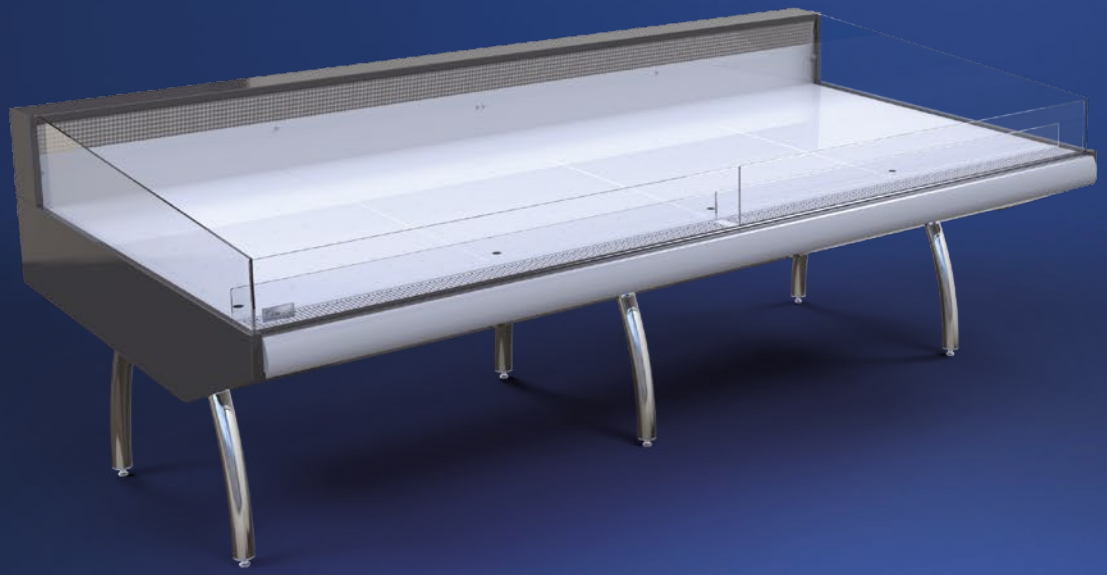

REMOTE

The picture shows LDH-2.5-01

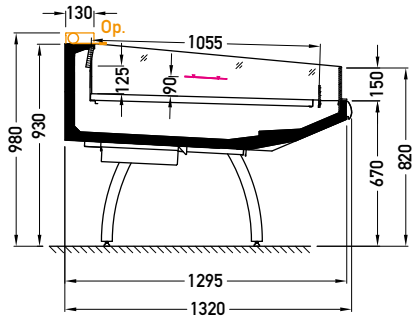

LDH-01

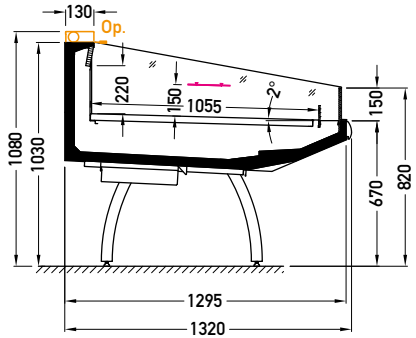

LDH-02

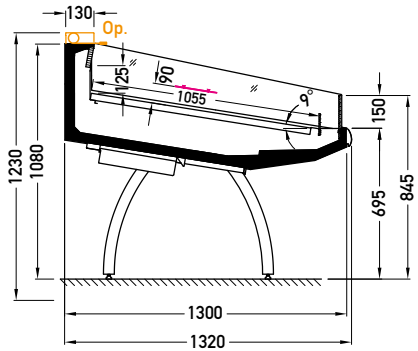

LDH-03

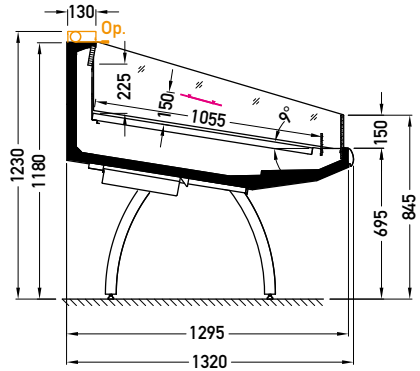

LDH-04

modules	LDH-01/02		1.25	2.5	3.75
modules	LDH-03/04	1.25	1.875	2.5	3.75

Holland

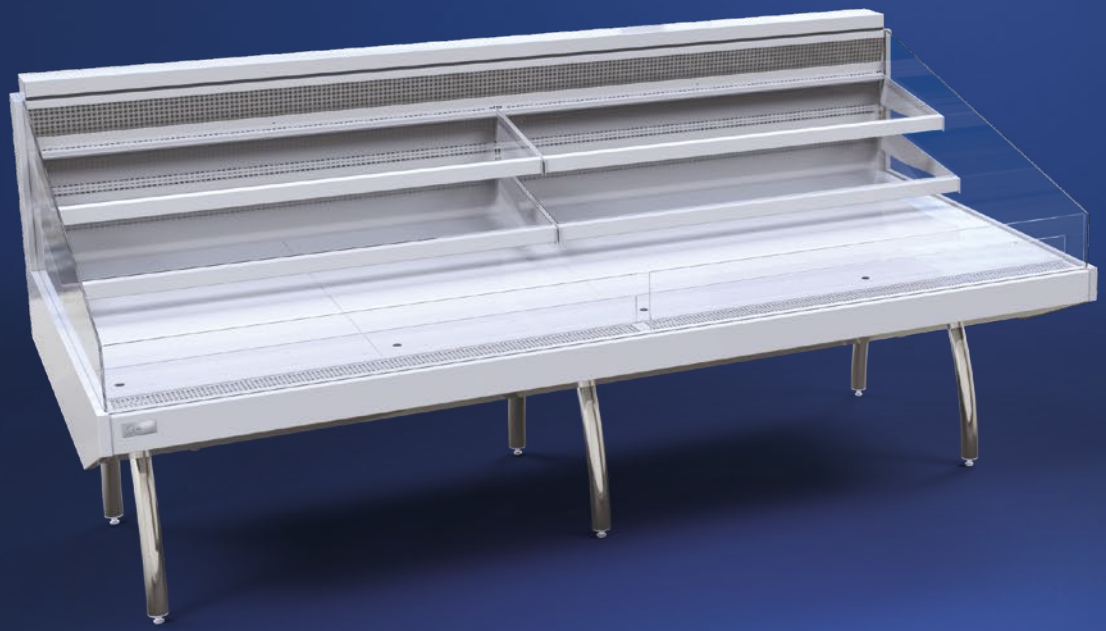

REMOTE

The picture shows LDH-2.5-05

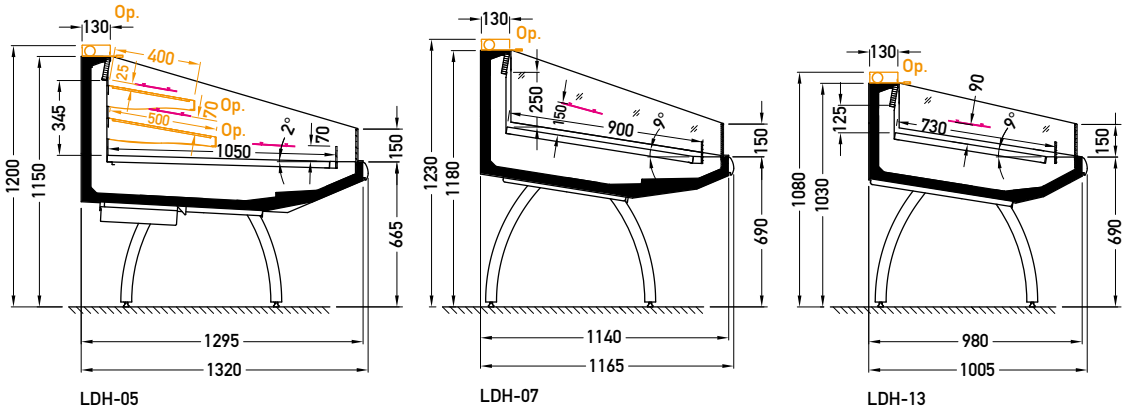

modules

1.25 1.875 2.5 3.75

Holland

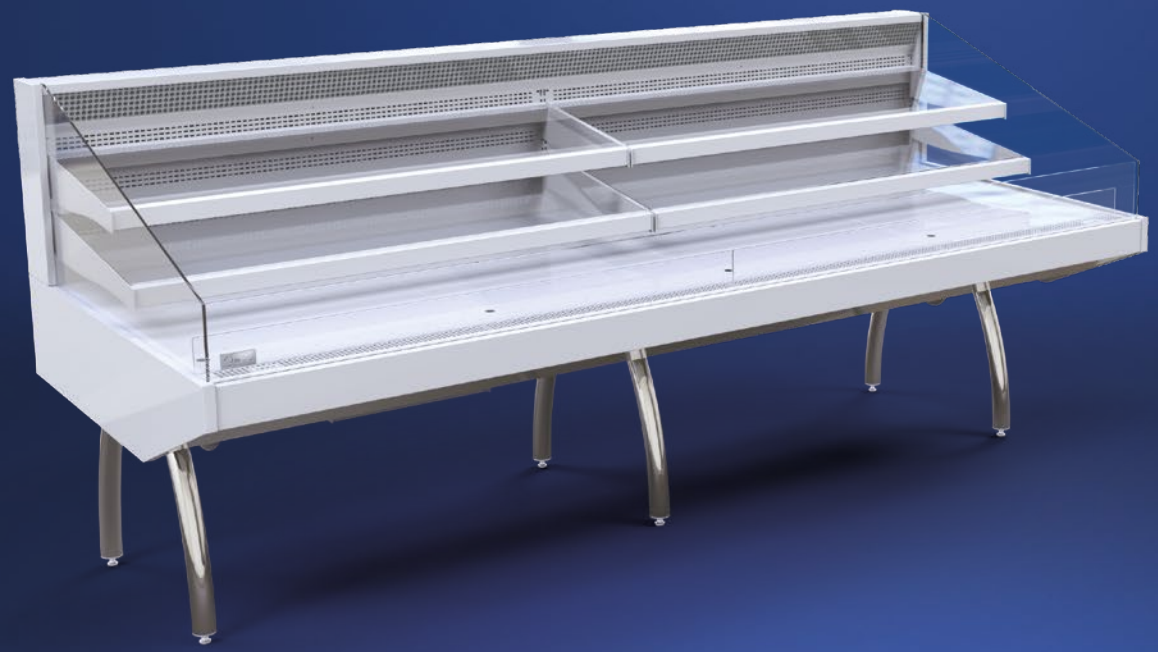

REMOTE

The picture shows LDH-2.5-15

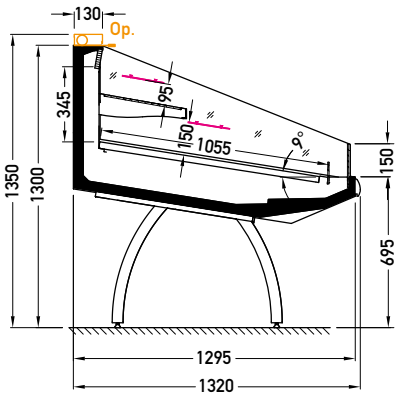

LDH-06

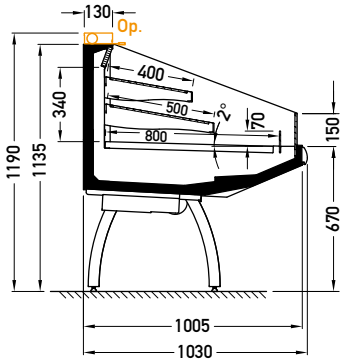

LDH-15

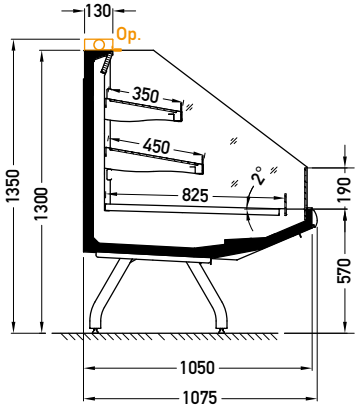

LDH-16

modules	LDH-06			1.875	2.5	
modules	LDH-15			1.25	2.5	
modules	LDH-16	1.25	1.875	2.5	3.75	

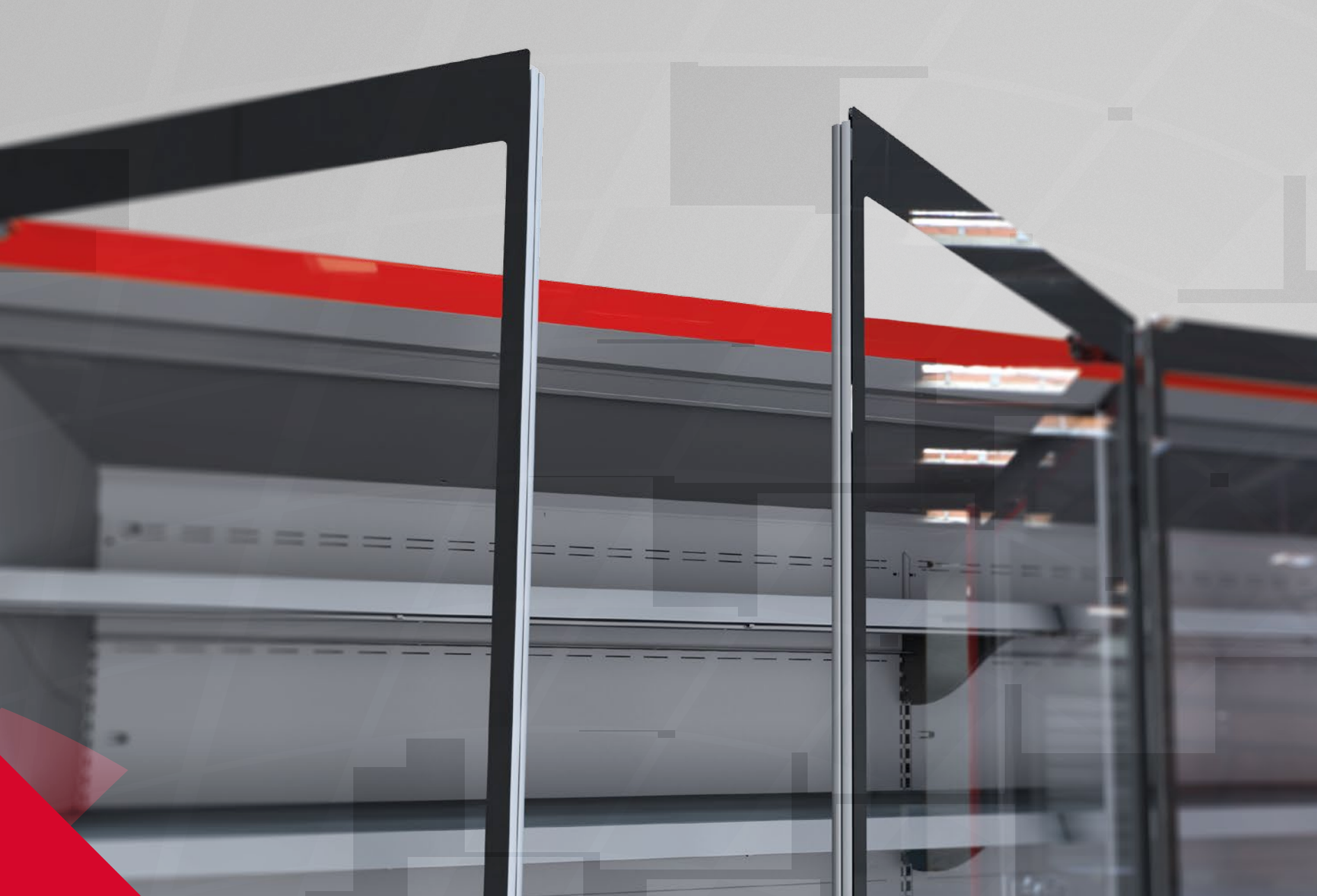

Multidecks

Our desire for continuous improvement and innovation has led us to develop systems and solutions that reduce environmental impact. That is why we have developed a system that eliminates defrost cycle and lowers the energy use.

Gerlach

REMOTE

The picture shows RDG-2.5-L3

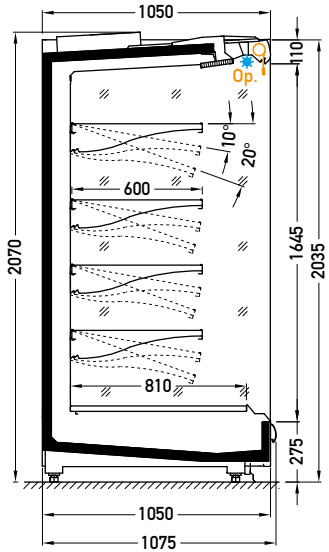

RDG-L2

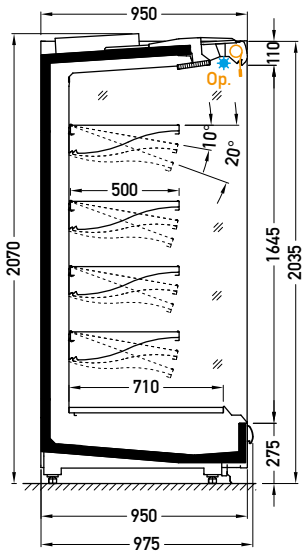

RDG-L3

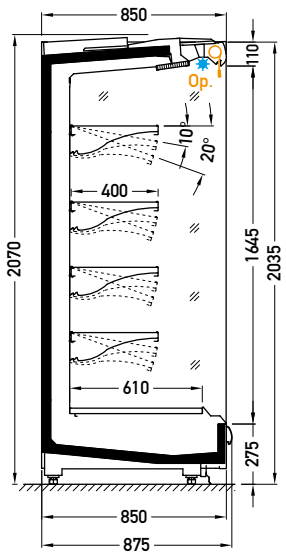

RDG-L4

modules

1.25 1.875 2.15 2.5 3.75

Gerlach

REMOTE

The picture shows RDG-2.5-H3 with doors

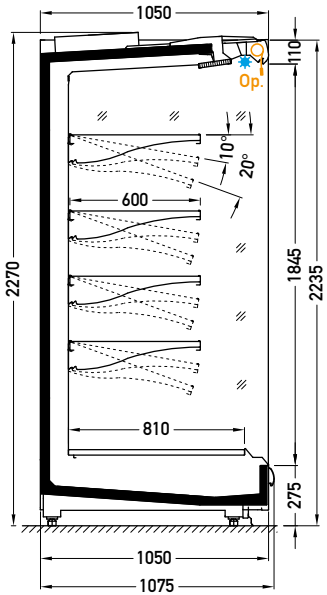

RDG-H2

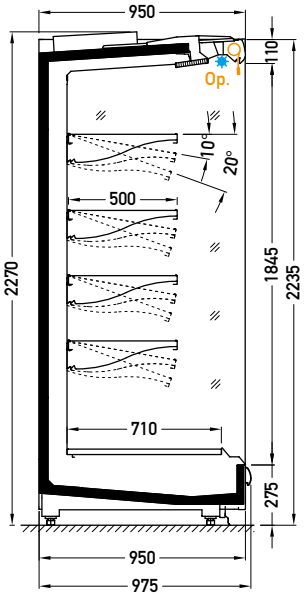

RDG-H3

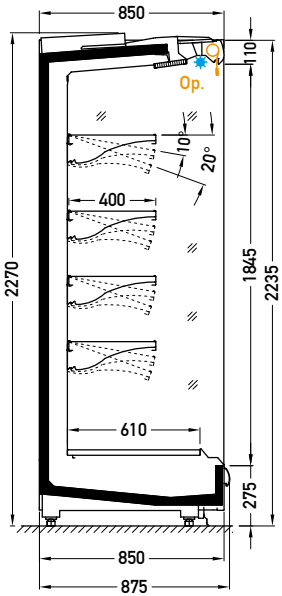

RDG-H4

modules

1.25 1.875 2.15 2.5 3.75

Gerlach

REMOTE

NO DEFROST system • The picture shows RDG-2.5-H3z with doors

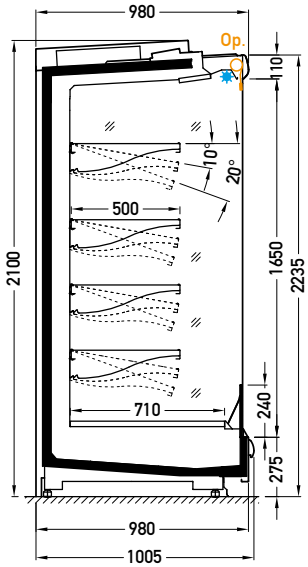

RDG-L3

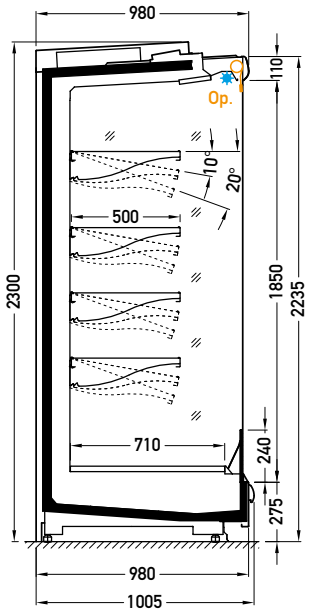

RDG-H3

modules

1.25 1.7 1.875 2.15 2.5 3.75

Kaukaz

REMOTE

The picture shows RDK-2.5-14 with doors

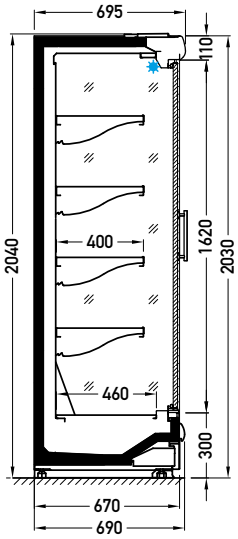

RDK-11

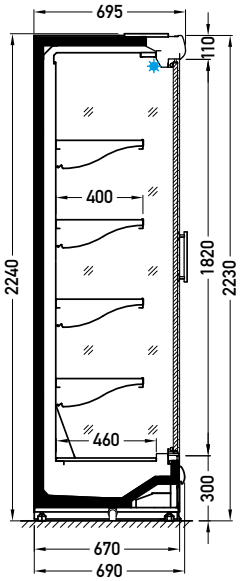

RDK-14

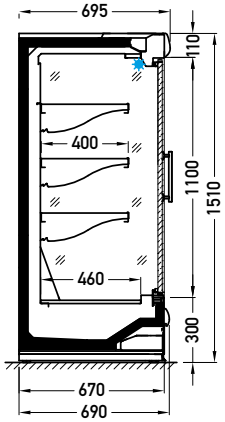

RDK-15

modules	RDK-11	1.25	1.6	1.875	2.15	2.5	3.75
modules	RDK-14			1.25	1.875	2.5	3.75
modules	RDK-15		1.25	1.875	2.5	3.75	G1

Kaukaz

REMOTE

The picture shows RDK-2.5-16 with doors

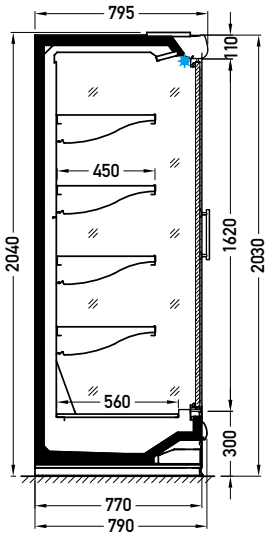

RDK-16

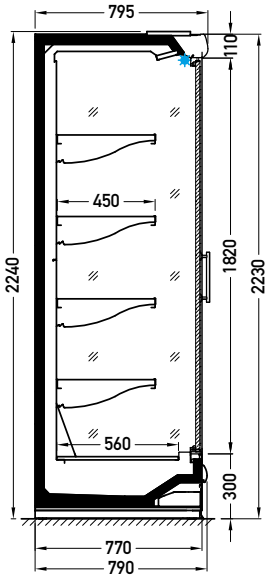

RDK-17

modules	RDK-16		1.25	1.875	2.5	3.75
modules	RDK-17	1.25	1.6	1.875	2.5	3.75

Himalaya

REMOTE

The picture shows RDH-2.5-L4

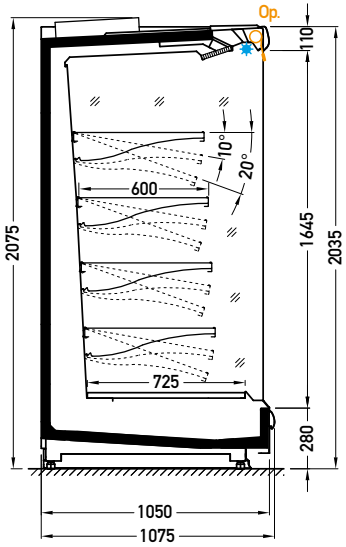

RDH-L2

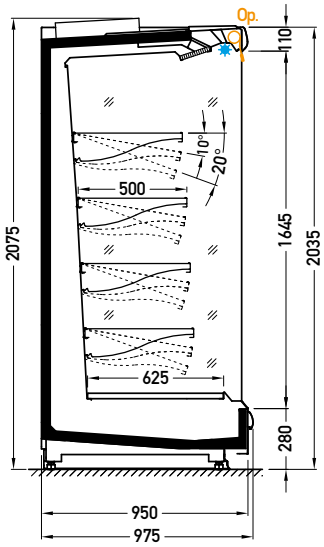

RDH-L3

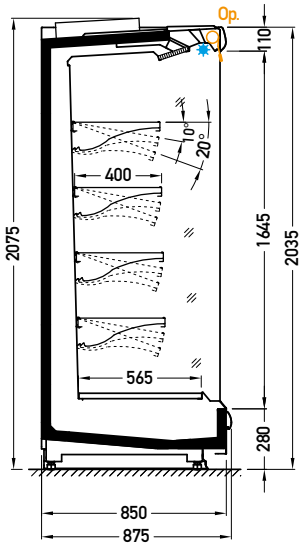

RDH-L4

modules

1.25 1.875 2.15 2.5 3.75

Himalaya

REMOTE

The picture shows RDH-2.5-H3

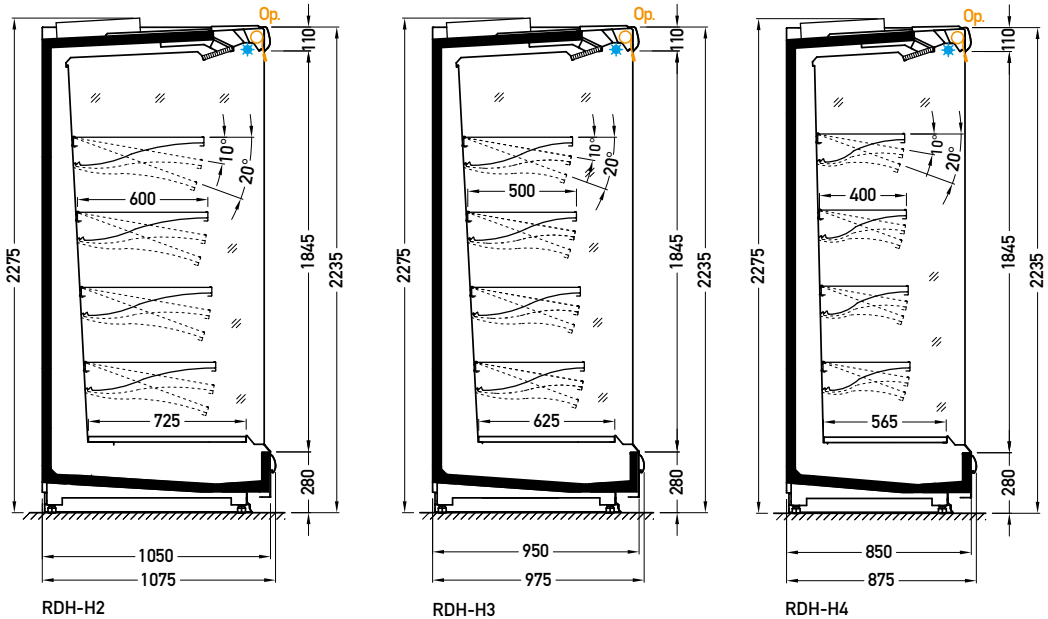

modules

1.25 1.875 2.15 2.5 3.75

Tarcoola

REMOTE

The picture shows RDT-2.5-L3 with doors

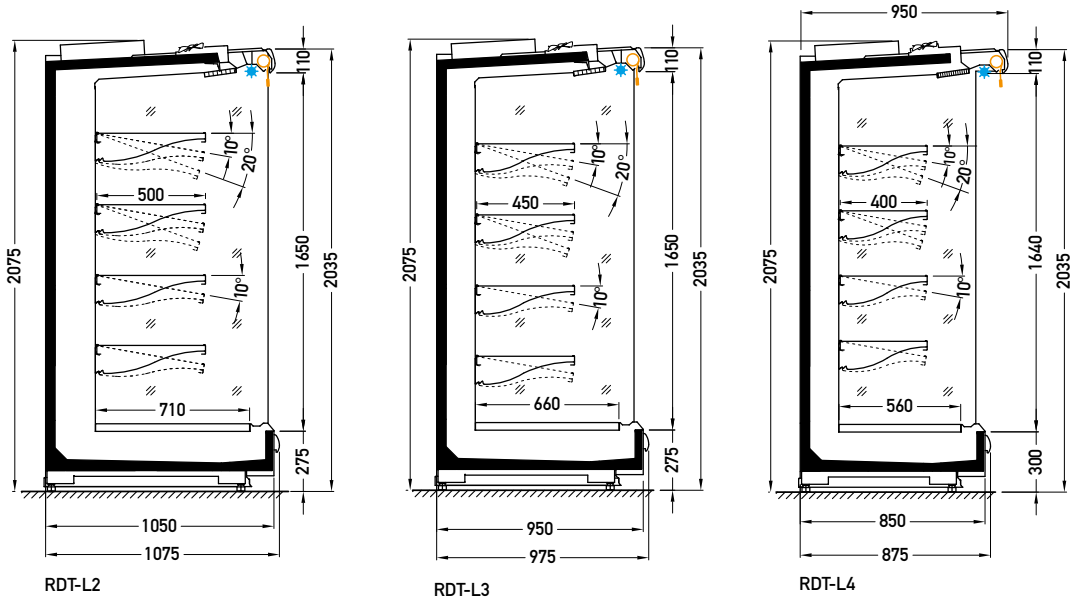

modules	RDT-L2	1.25	1.875	2.15	2.5	3.75
modules	RDT-L3/L4		1.25	1.875	2.5	3.75

Tarcoola

REMOTE

The picture shows RDT-2.5-M3 with doors

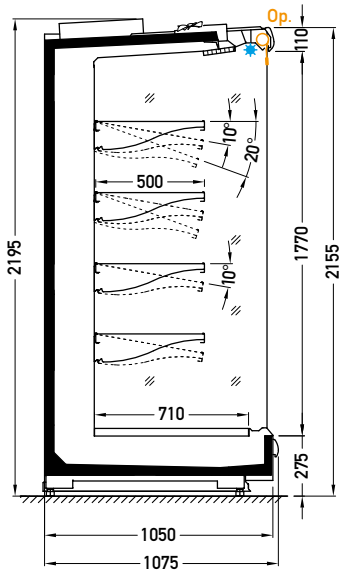

RDT-M2

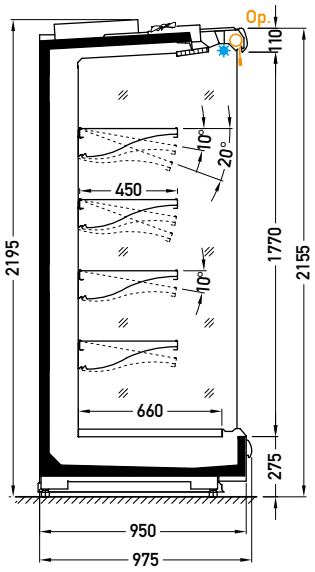

RDT-M3

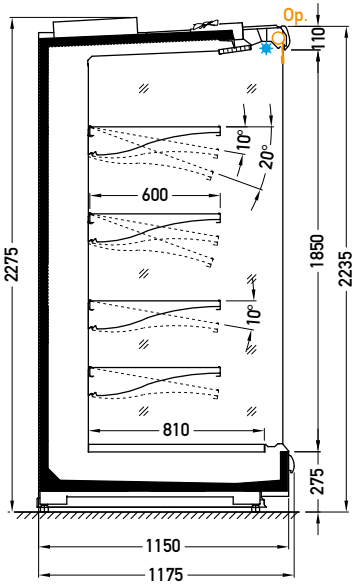

RDT-H1

modules	RDT-M2/M3	1.25	1.875	2.15	2.5	3.75
modules	RDT-H1		1.25	1.875	2.5	3.75

Iberg

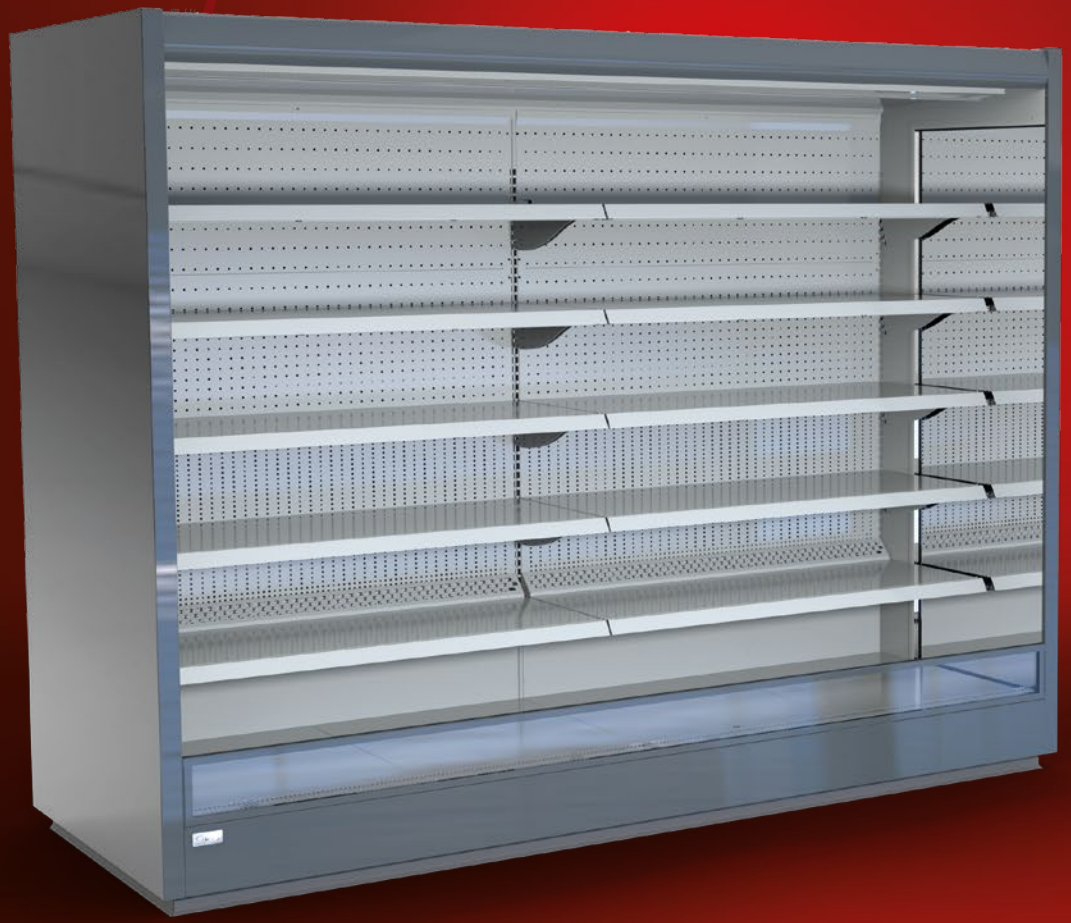

REMOTE

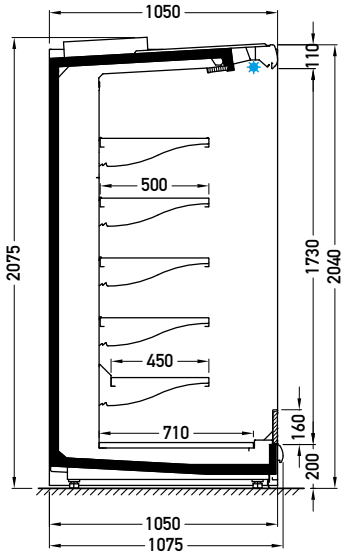

RDI-L2

modules RDI-L2 2.5 3.75

Olimp

REMOTE

The picture shows RDO-2.5-H2

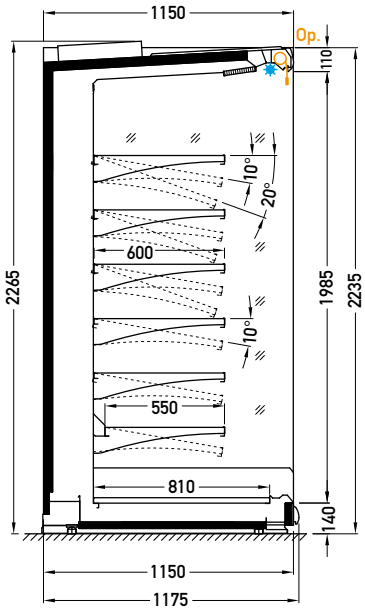

RDO-H1

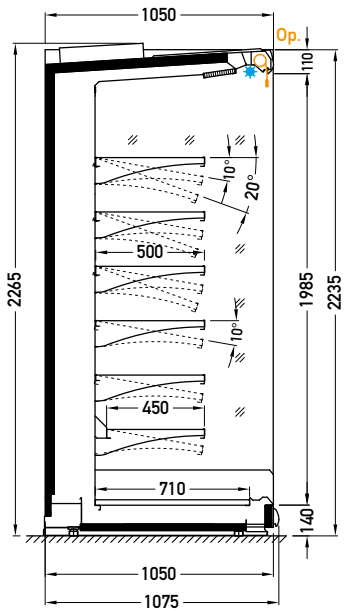

RDO-H2

modules	RDO-H1			1.875	2.5	3.75
modules	RDO-H2	1.25	1.875	2.15	2.5	3.75

Laki

REMOTE

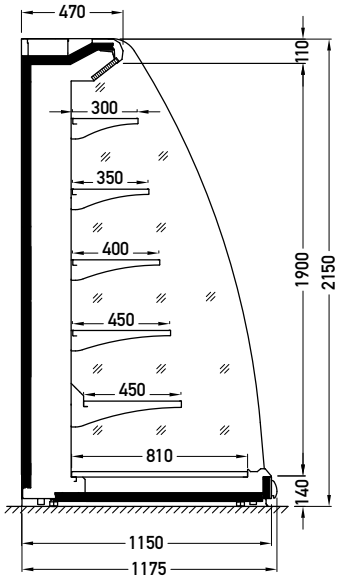

RDL-M1

modules

1.875 2.5 3.75

Panama

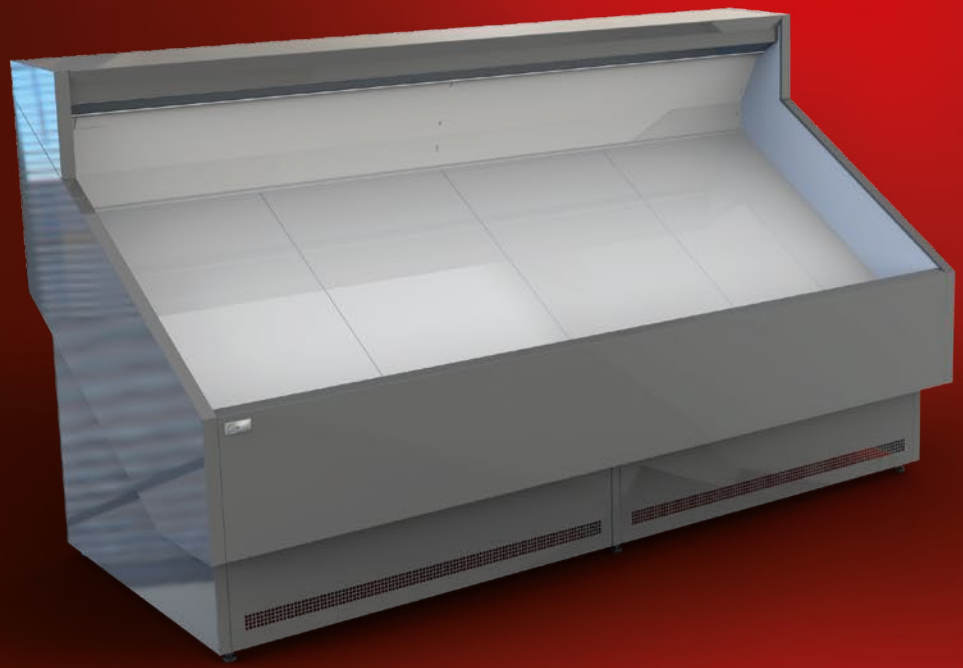

REMOTE

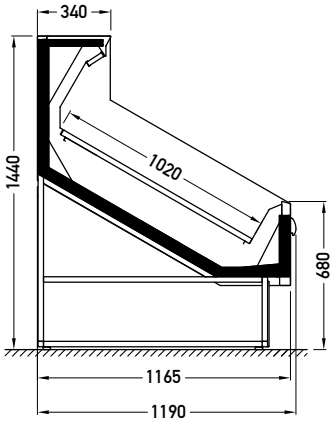

RDP-03

Panama

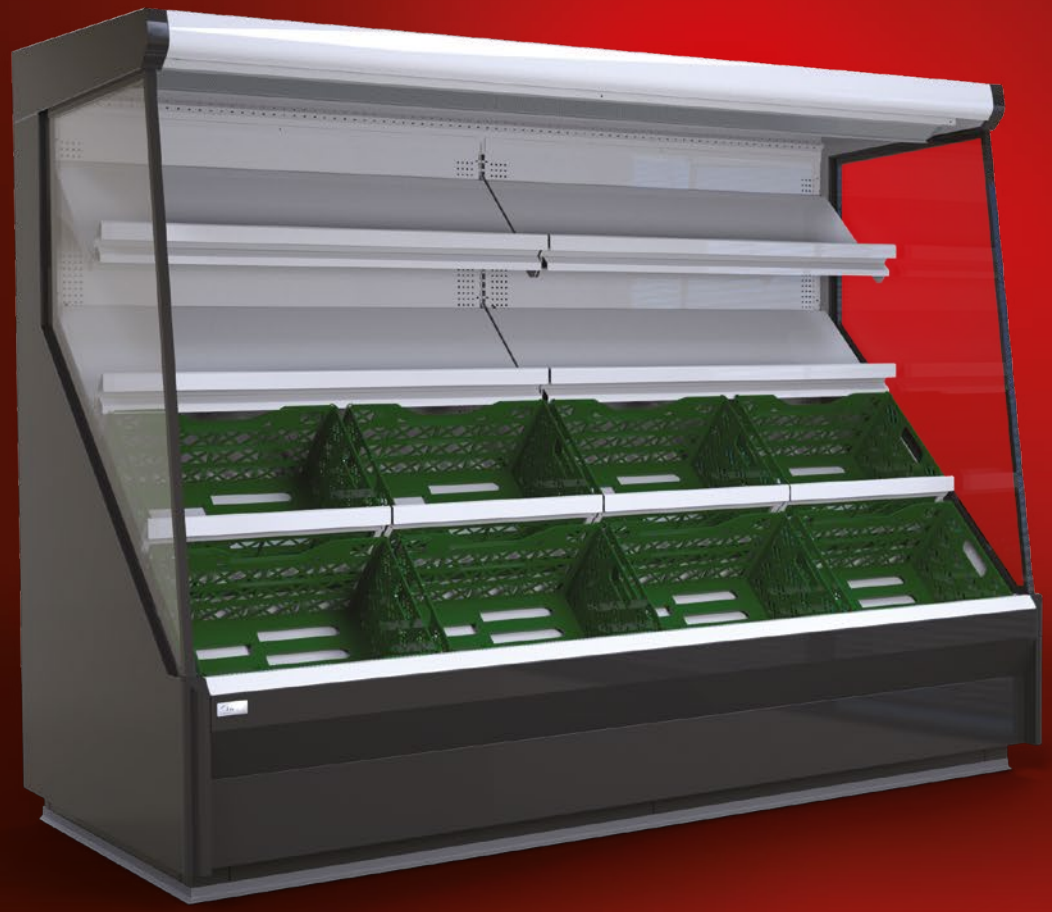

REMOTE

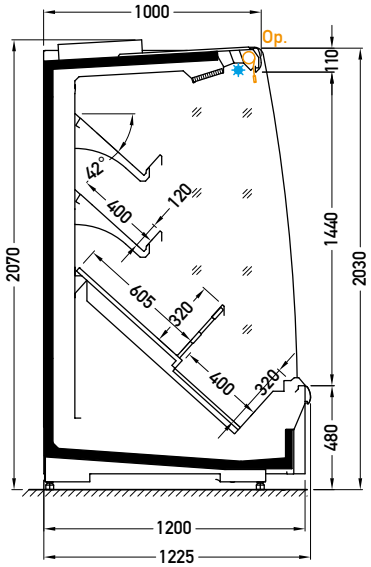

RDP-07

modules

1.875 2.5 3.75

Parma

REMOTE

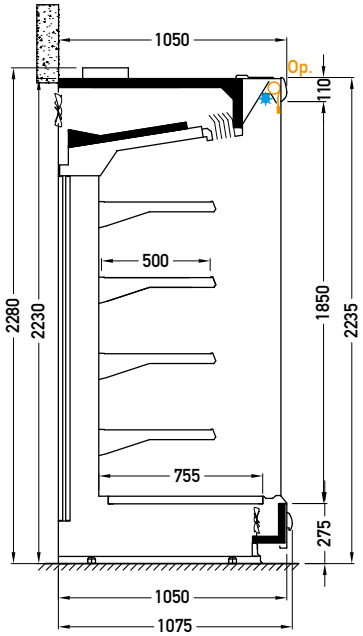

RDP-H2

modules

1.875 2.5 3.75

Parma

REMOTE

The picture shows RDP-2.5-H1

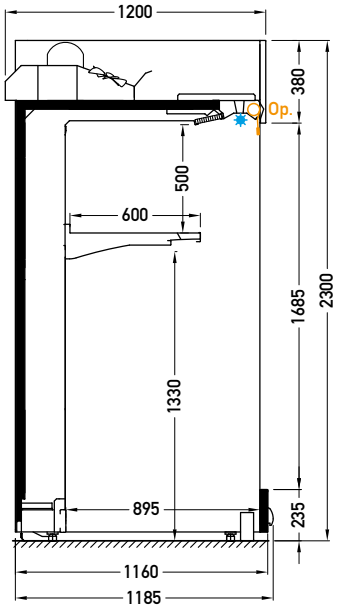

RDP-L1

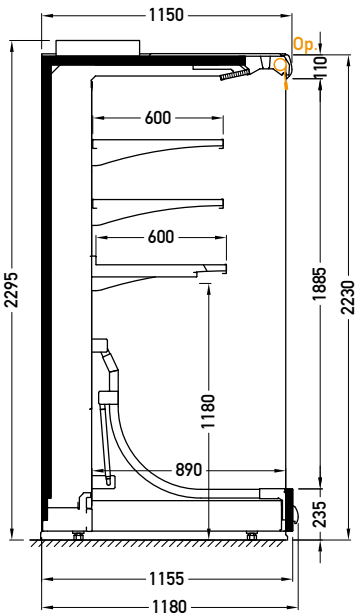

RDP-H1

modules	RDP-L1				2.5
modules	RDP-H1	1.4	2.5	2.8	3.75

Retro Banco

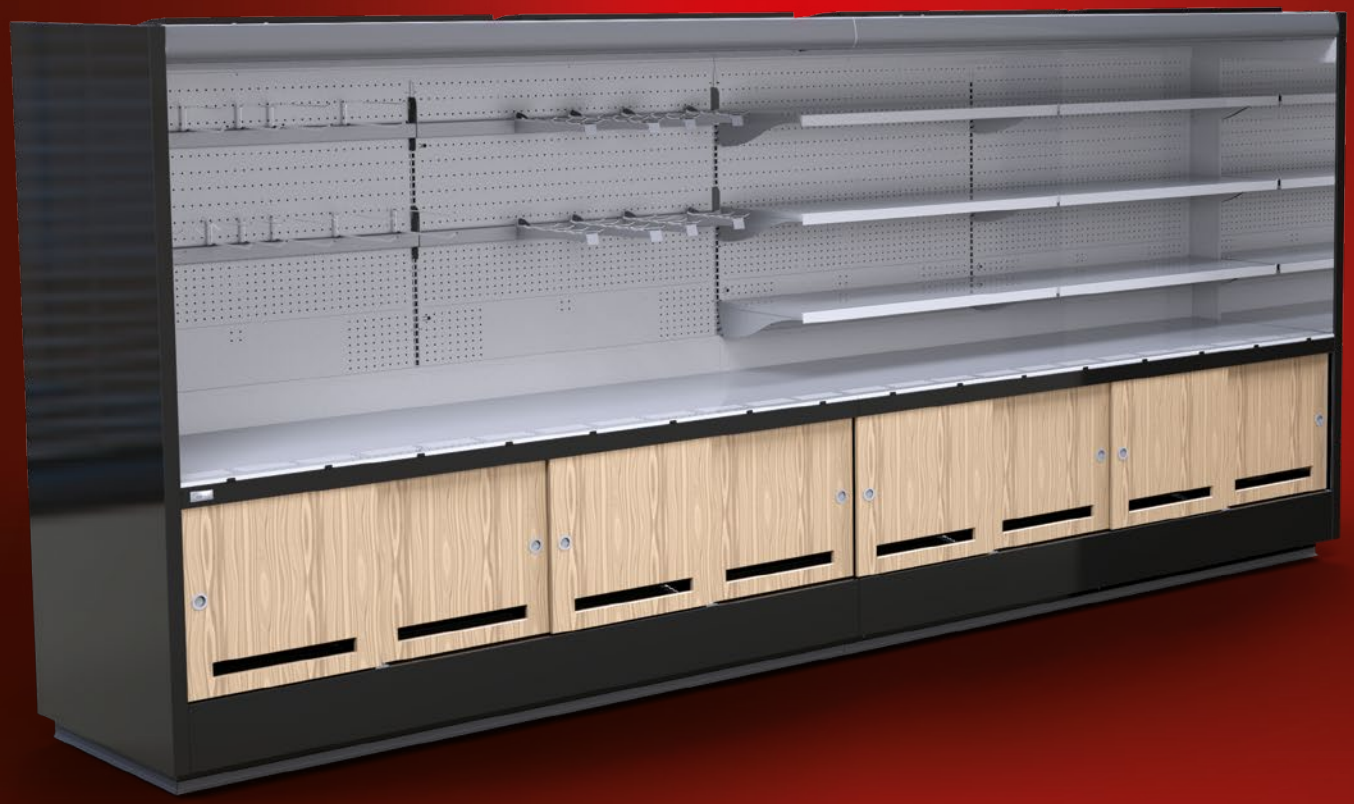

REMOTE

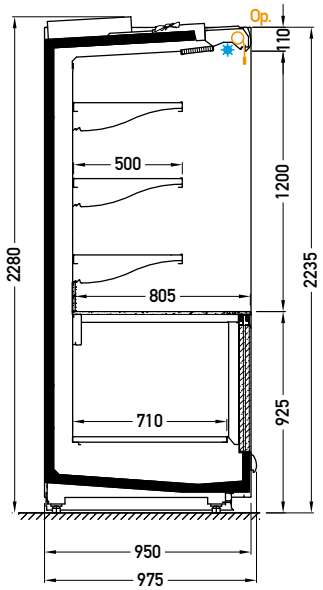

RDB-H3

modules

1.25 2.5 3.75

Semi Vertical Multidecks

This range of lower height multidecks has been designed to combine compact size and large display area. This solution provides a variety of options for store layout.

Andy

REMOTE

Possibility to connect with LDL-27 • The picture shows RDA-2.5-11

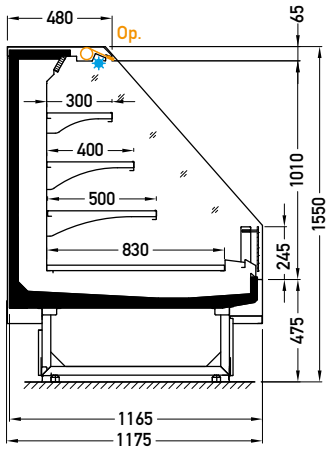

RDA-11

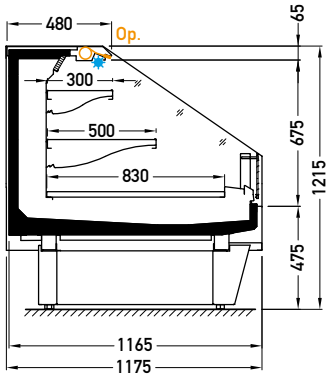

RDA-...-32

modules	RDA-11	1.25	1.875	2.5	3.75	
corners	RDA-32					NZ45
modules	RDA-32	1.25	1.875	2.15	2.5	3.75

Andy

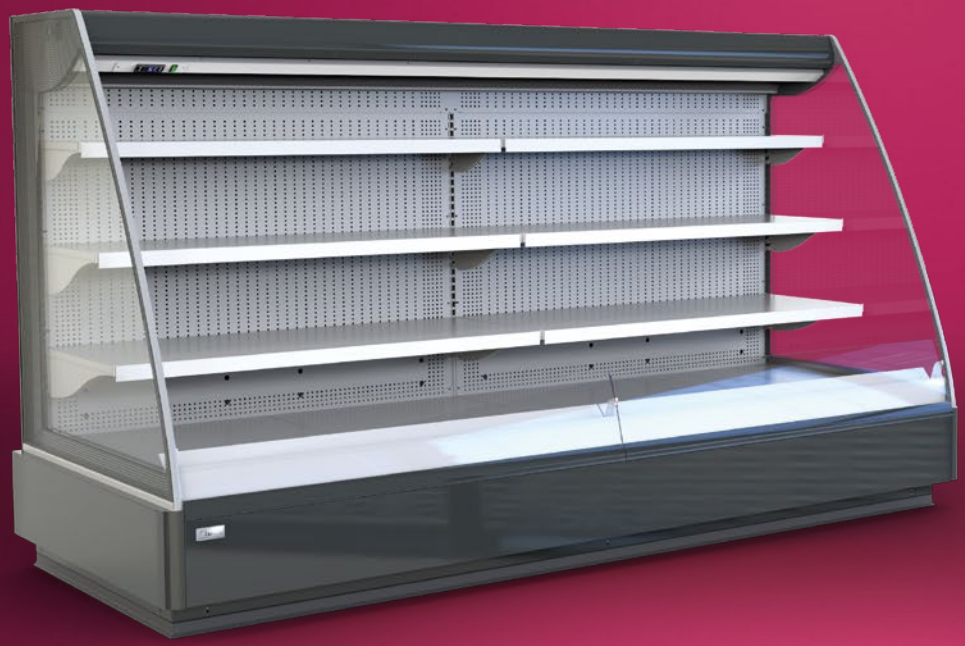

REMOTE

The picture shows RDA-2.5-23

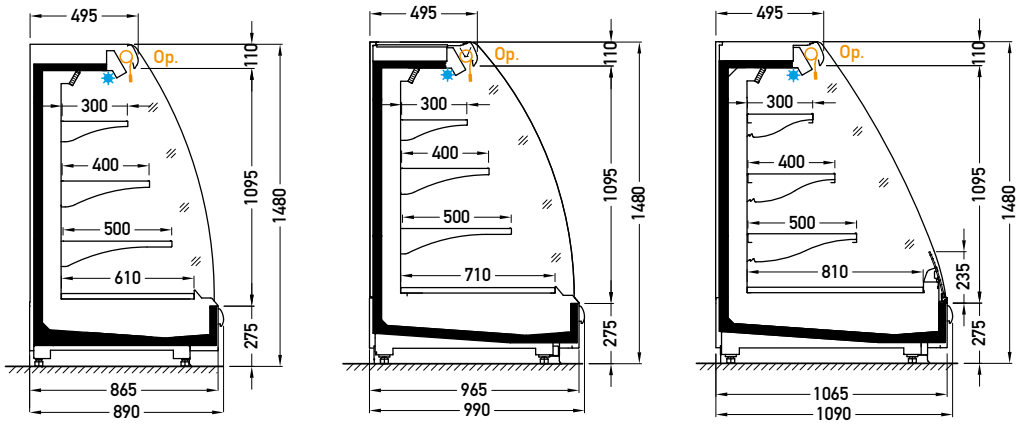

corners	RDA-15	NZ180			
modules		1.25	1.875	2.5	3.75

Andy

REMOTE

The picture shows RDA-2.5-18

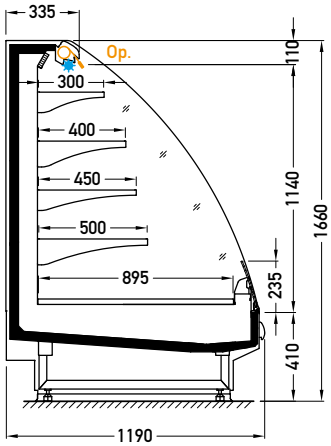

RDA-16

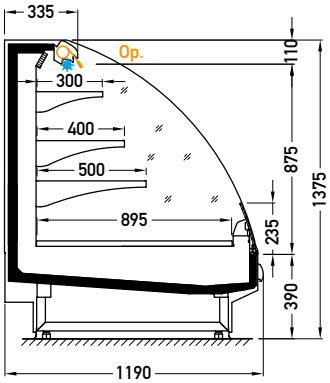

RDA-17

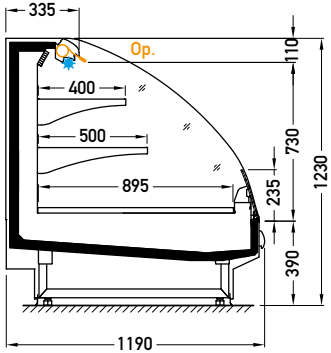

RDA-18

RDA-16 NW45 **RDA-18** NZ45

1.25 1.875 2.15 2.5 3.75

corners

modules

Andy

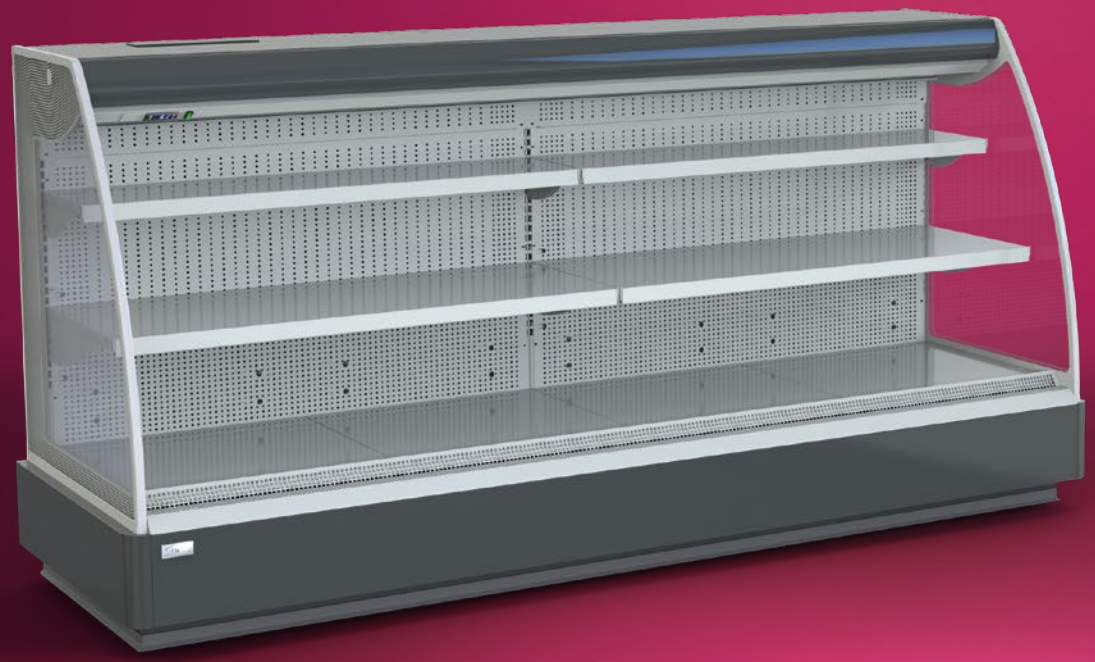

REMOTE

The picture shows RDA-2.5-25

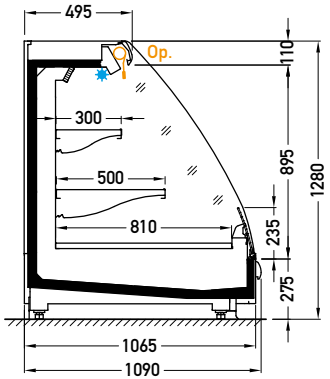

RDA-24

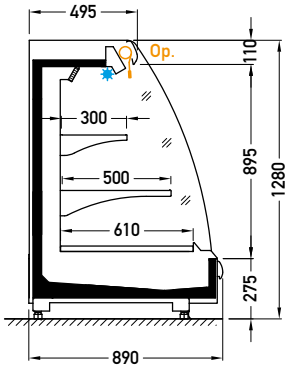

RDA-25

modules	RDA-24			1.875	2.5	3.75
modules	RDA-25	1.25	1.875	2.15	2.5	3.75

Andy

REMOTE

The picture shows RDA-2.5-13

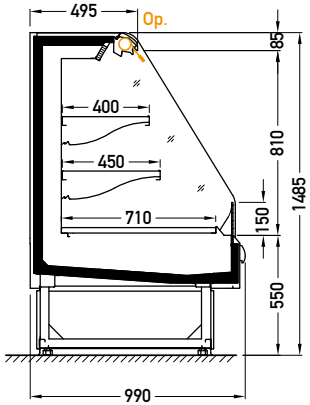

RDA-13

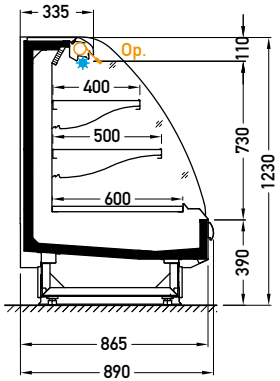

RDA-28

modules	RDA-13	1.25	1.875	2.5	3.75
modules	RDA-28			2.5	

Andy

REMOTE

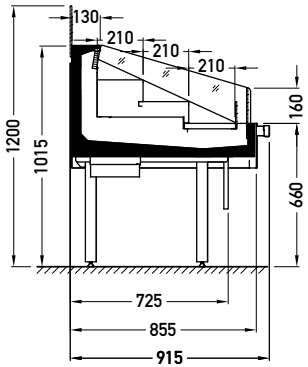

RDA-26

modules

1.25 1.875 2.15 2.5 3.75

Elegant

REMOTE

Possibility to connect with LDL-37

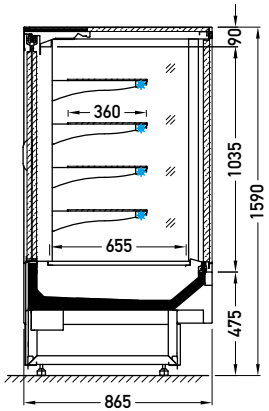

RDE-24

modules

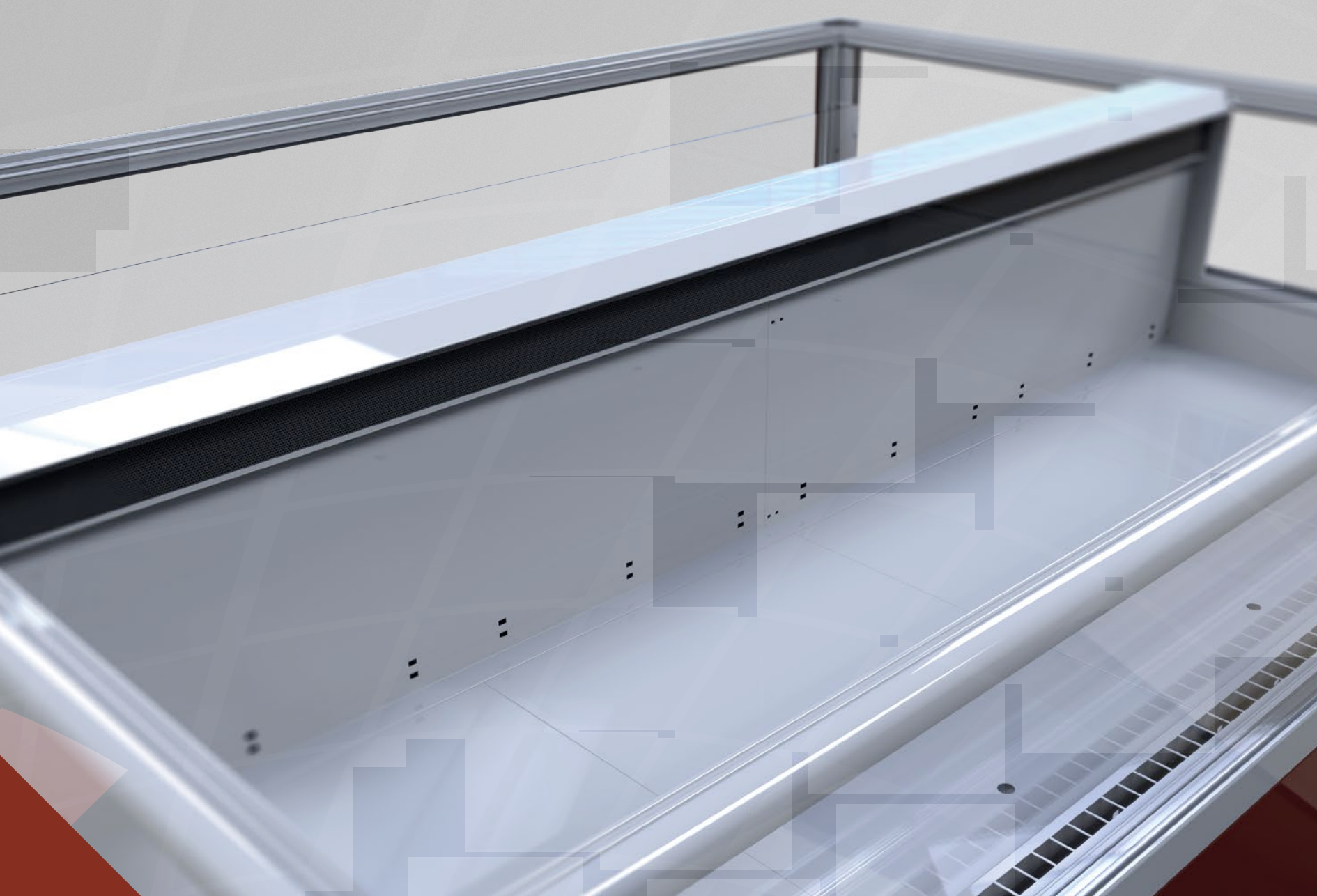

Islands

These are best adapted for spaces, where you do not want to obscure the view. We constantly improve the design of our equipment and we managed to create better side visibility, easier combining into lines, better service access for some parts and better design capabilities with painted vertical corner profiles.

Andy

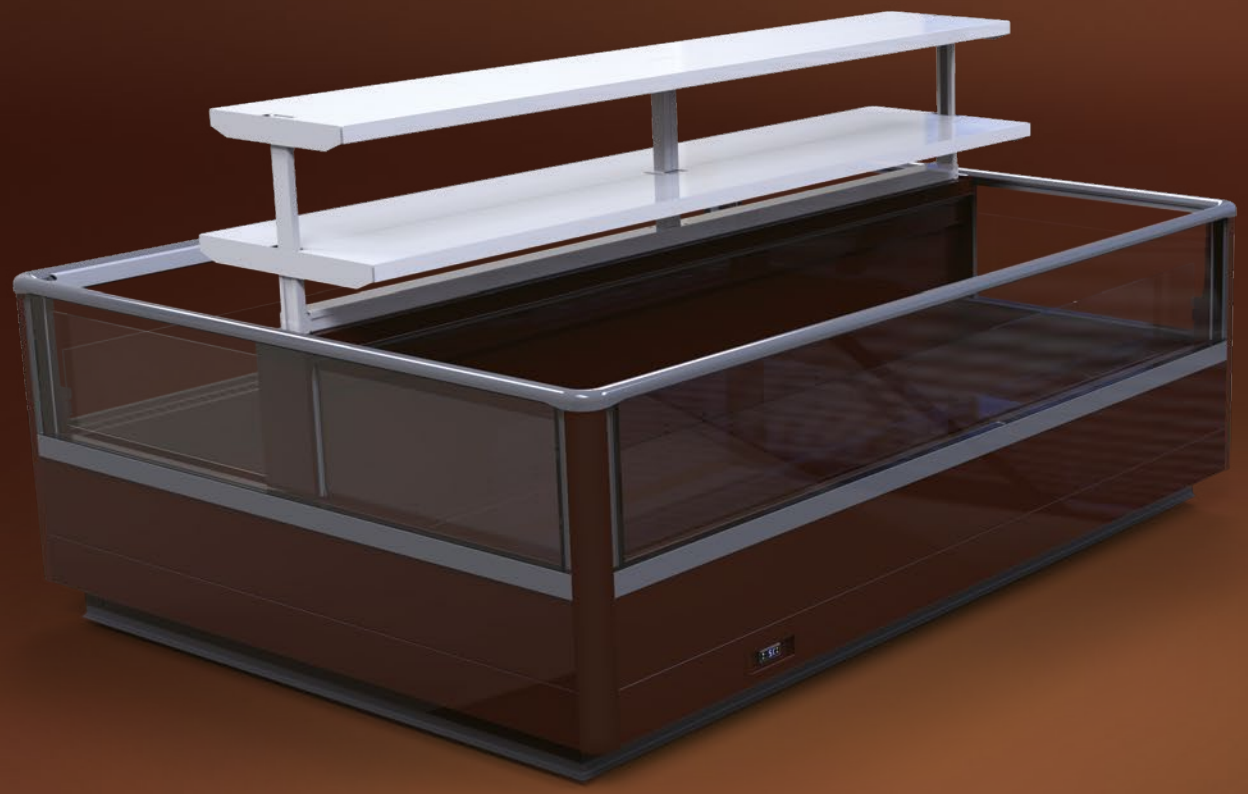

REMOTE

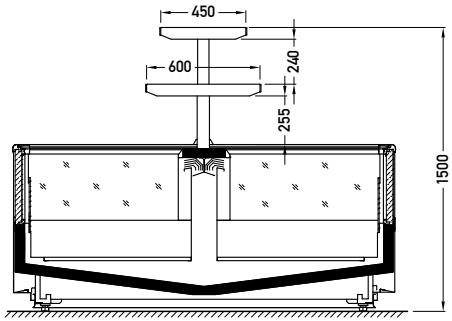

WNE/WDE-03/04/06/07/08/09 ECO

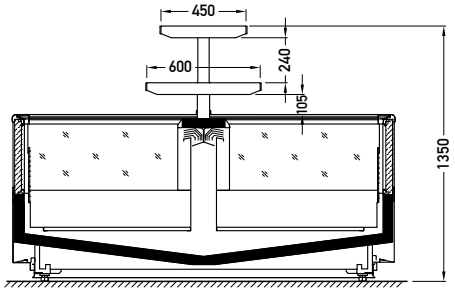

WNE/WDE-03/04/06/07/08/09 ECO

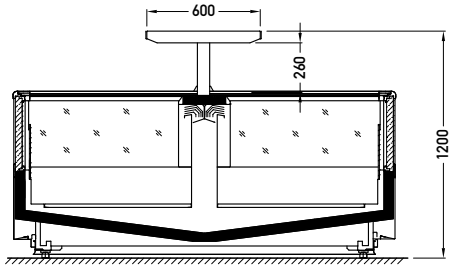

WNE/WDE-03/04/06/07/08/09 ECO

Everest

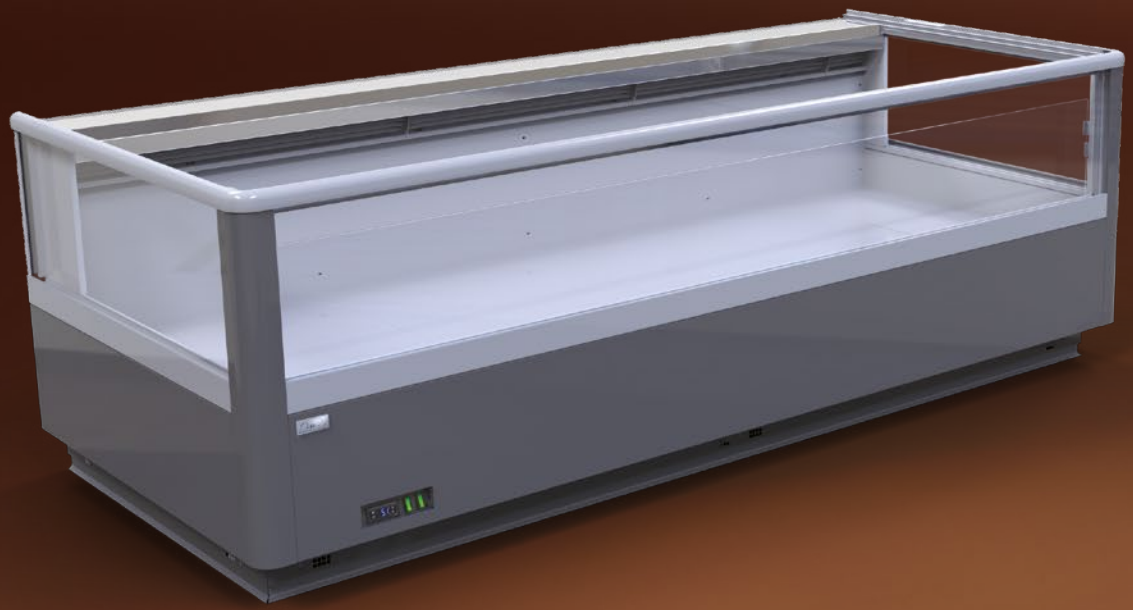

REMOTE

The picture shows WNE-2.5-01

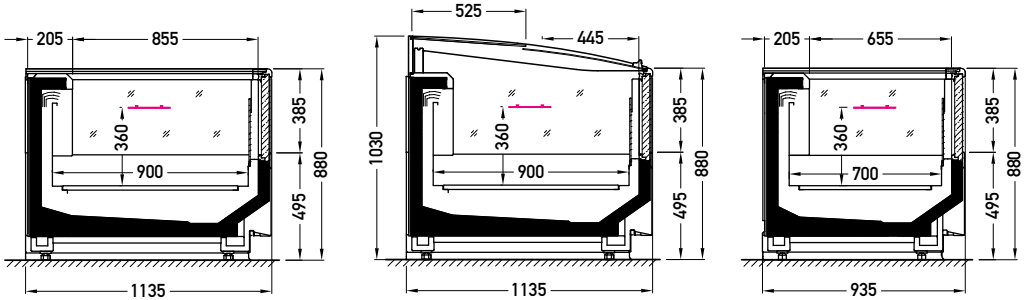

WNE/WDE-01 ECO

WNE/WDE-01 ECO

WNE/WDE-02 ECO

modules

1.875 2.15 2.5 3.75

Everest

REMOTE

The picture shows WNE-2.5-03

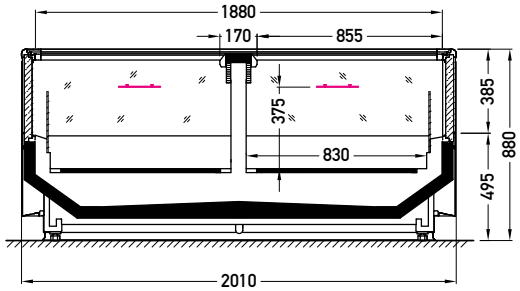

WNE/WDE-03 ECO

modules

1.875 2.5 3.75 G1

Everest

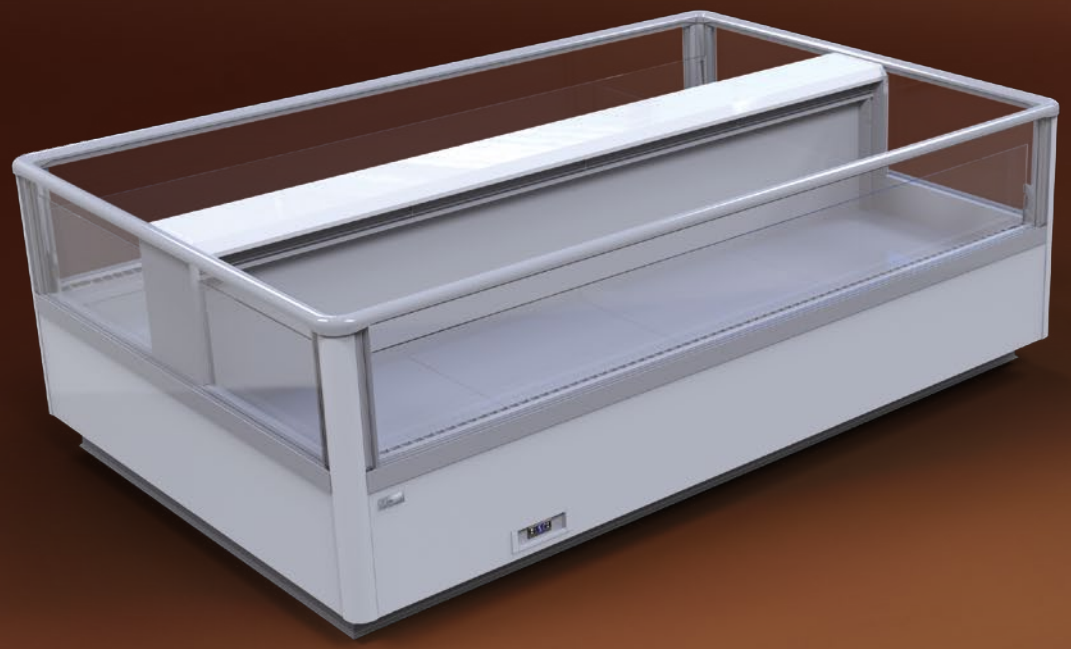

REMOTE

The picture shows WNE-2.5-06

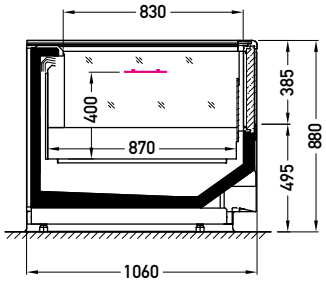

WNE/WDE-G3-06 ECO

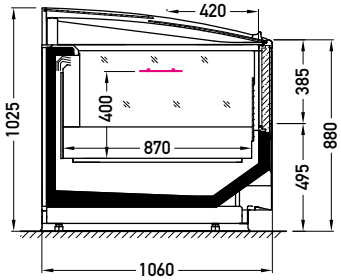

WNE/WDE-G3-06 ECO

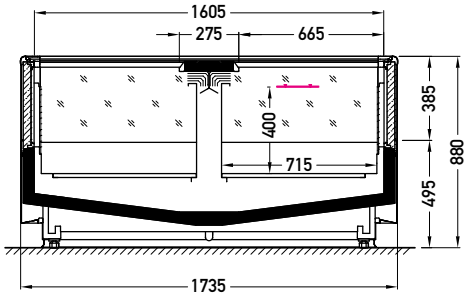

WNE/WDE-06 ECO

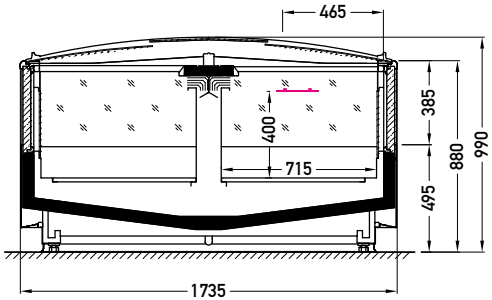

WNE/WDE-06 ECO

Everest

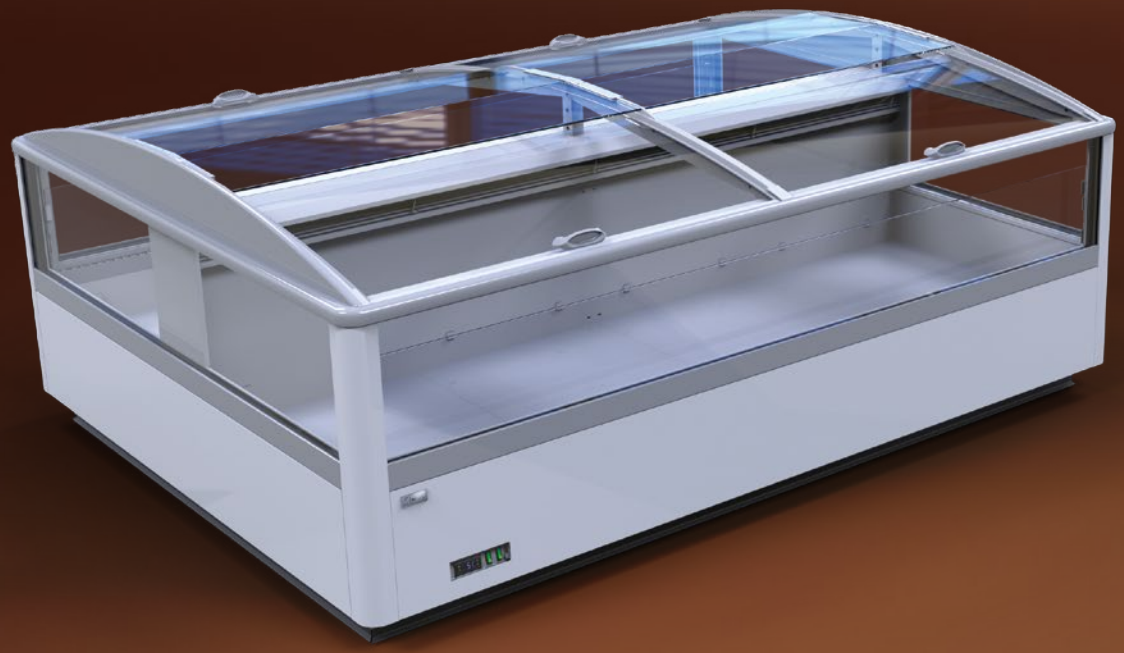

REMOTE

The picture shows WNE-2.5-07

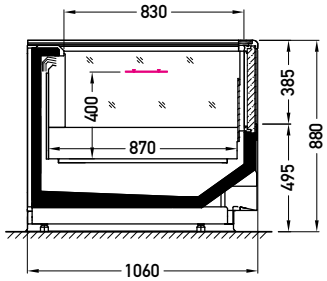

WNE/WDE-G4-07 ECO

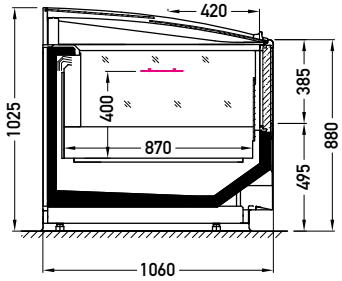

WNE/WDE-G4-07 ECO

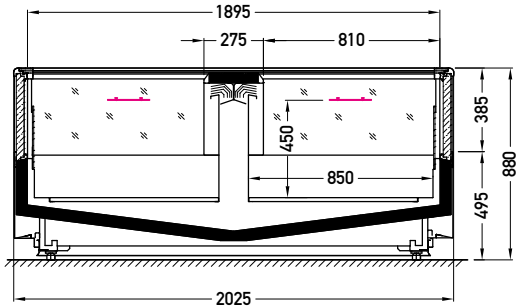

WNE/WDE-07 ECO

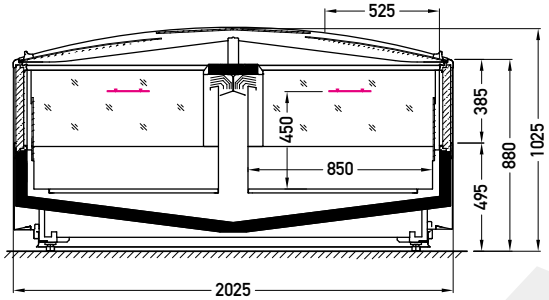

WNE/WDE-07 ECO

Everest

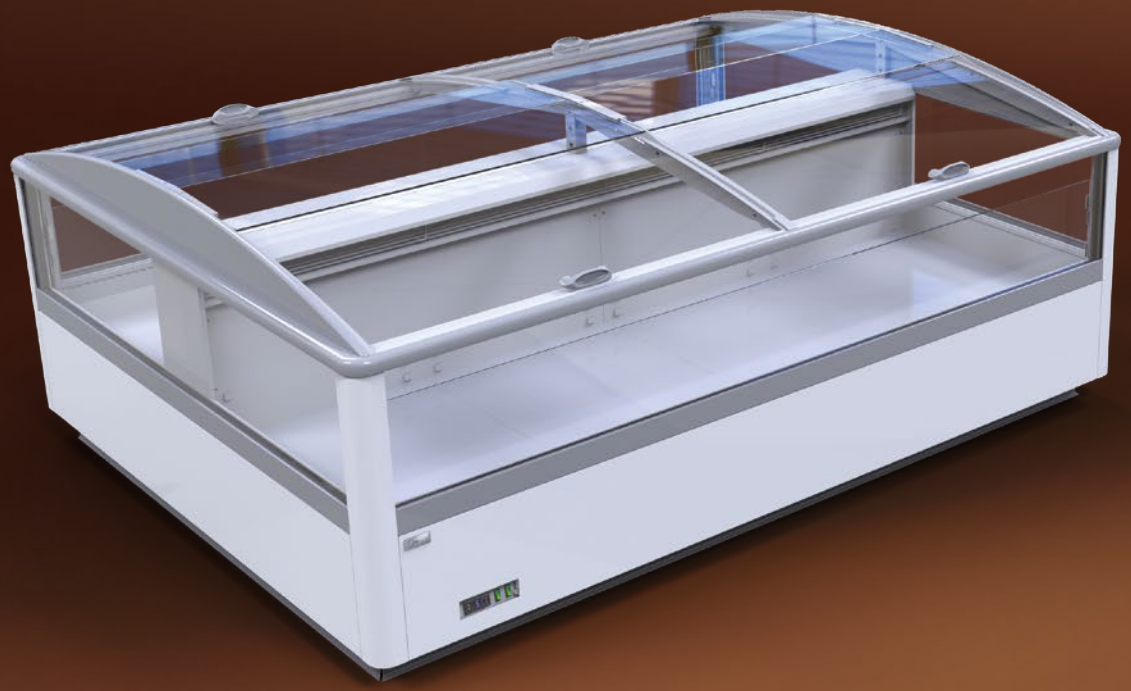

REMOTE

The picture shows WNE-2.5-08

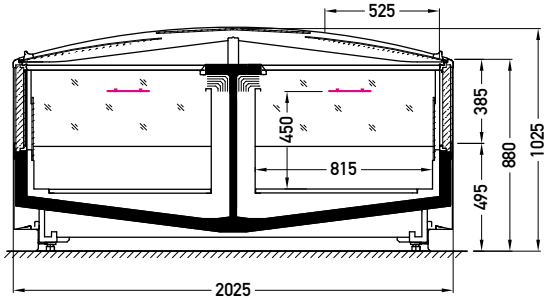

WNE/WDE-08 ECO

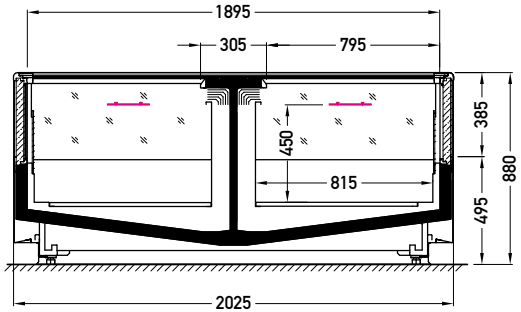

WNE/WDE-08 ECO

modules

1.875 2.5 3.75 G4

Idea

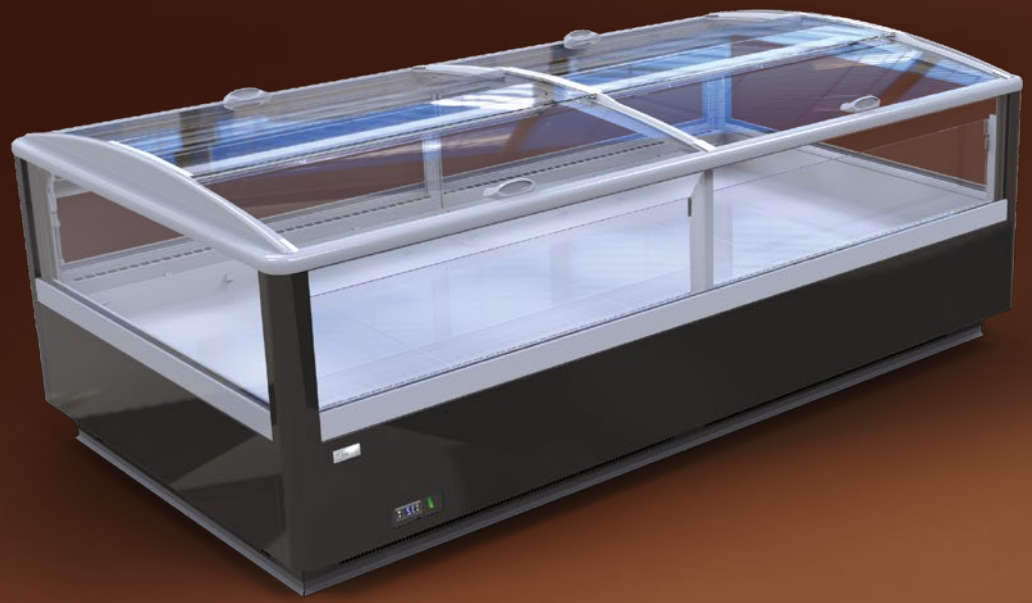

REMOTE

The picture shows WNI-2.5-04

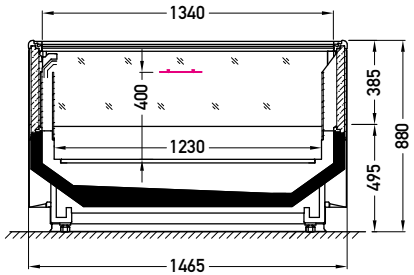

WNI/WDI-04 ECO

modules

1.875 2.5 3.75 G2

Idea

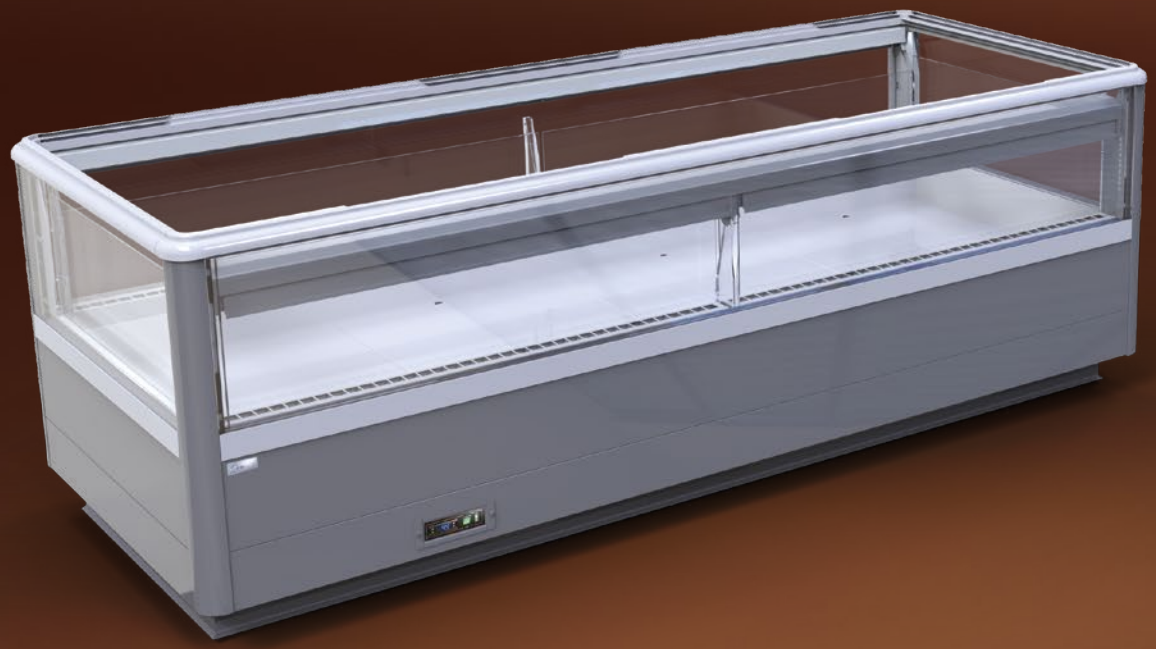

REMOTE

The picture shows WNI-2.5-05

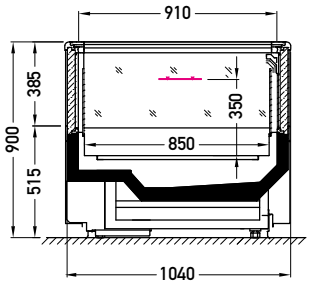

WNI-05

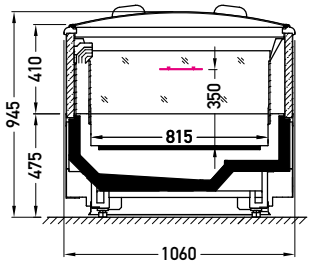

WNI-05

modules

1.875 2.5 3.75

Cabinets
and Mix Cabinets

It is typically people with busy lifestyles who are shopping for frozen products. Good arrangement of a store can save a lot of time while shopping. That is why design of our cabinets is about good visibility and ergonomics. Easy to choose – easy to reach. But when there is no perfect match for interior requirements, then the only solution is to mix. Our line of mix cabinets is a customized solution, so you do not have to compromise anymore – you just have a broad range of equipment to choose from.

Arctic

REMOTE

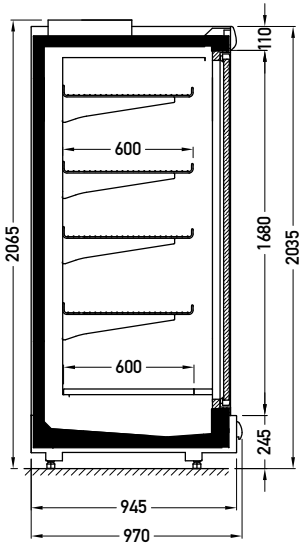

SNA-L2/L3/L4/L5

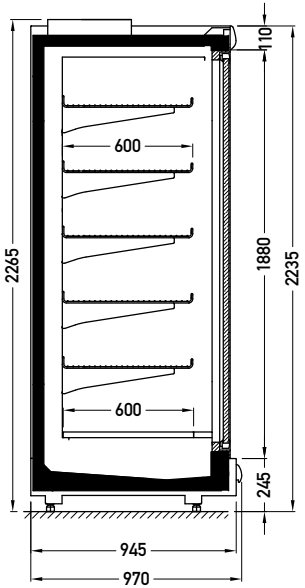

SNA-H2/H3/H4/H5

modules L1-0.795 L2-1.564 L3-2.342 L4-3.123 L5-3.898

modules H1-0.795 H2-1.564 H3-2.342 H4-3.123 H5-3.898

Mix

REMOTE

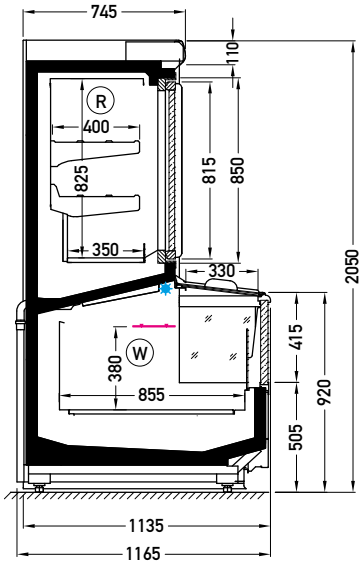

MNX/MDX-L1

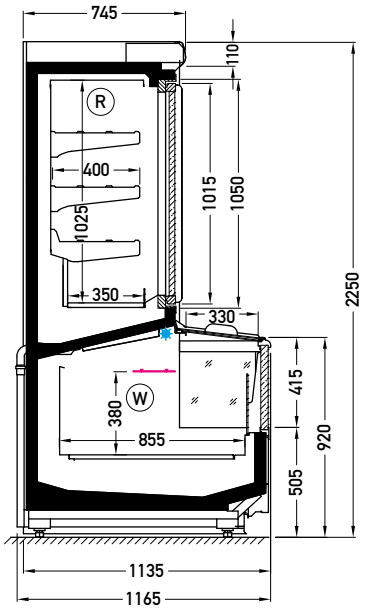

MNX/MDX-H1

modules

1.875 2.5 3.75 G1

Mix

REMOTE

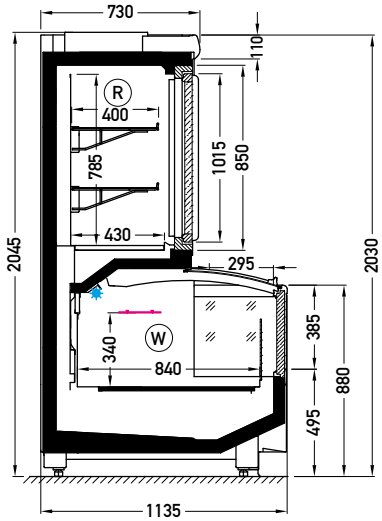

MNY/MDY-L2

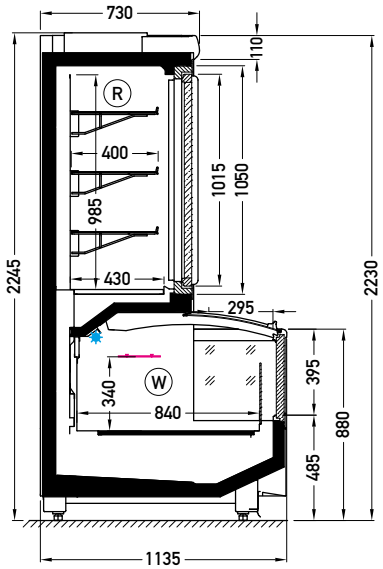

MNY/MDY-H2

modules

1.875 2.5 3.75

COUNTERS

pp. 5-37

Grazia LDG-[module]-04

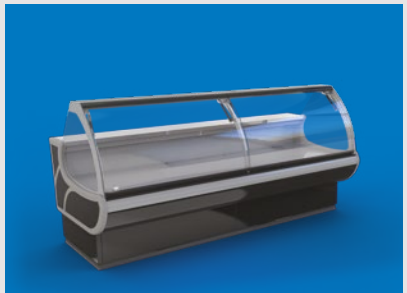

Grazia LDG-[module]-07

Grazia LDG-[module]-27

Lhotse LDL-[module]-06

Lhotse LDL-[module]-07

Lhotse LDL-[module]-07 Swing Glass

Lhotse LDL-[module]-27

Lhotse LDL-[module]-37

Lhotse LDL-[module]-37 Slide Up

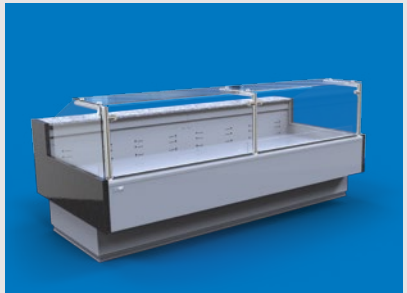

Lhotse LDL-[module]-09

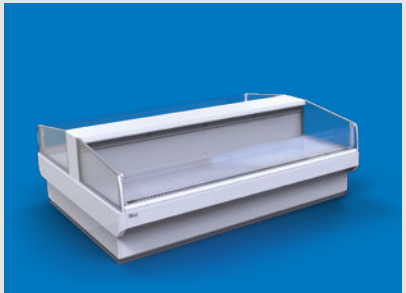

Lhotse LDL-[module]-12/16

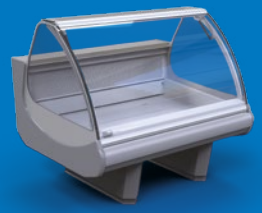

Lhotse LSL-[module]-11

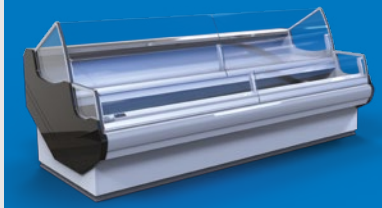

Lhotse LDL-[module]-13

Mana LDM-[module]-37

Holland LDH-[module]-01/02/03/04

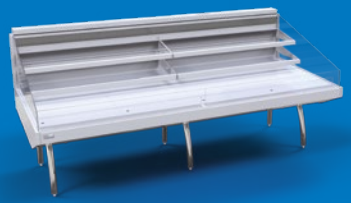

Holland LDH-[module]-05/07/13

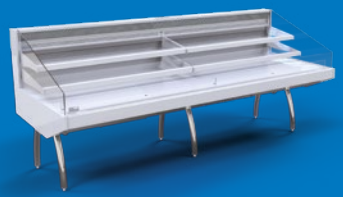

Holland LDH-[module]-06/15/16

MULTIDECKS

pp. 41-73

Gerlach RDG-[module]-L2/L3/L4

Gerlach RDG-[module]-H2/H3/H4

Gerlach RDG-[module]-L3z/H3z

Kaukaz RDK-[module]-11/14/15

Kaukaz RDK-[module]-16/17

Himalaya RDH-[module]-L2/L3/L4

Himalaya RDH-[module]-H2/H3/H4

Tarcoola RDT-[module]-L2/L3/L4

Tarcoola RDT-[module]-M2/M3/H1

Iberg RDI-[module]-L2

Olimp RDO-[module]-H1/H2

Laki RDL-[module]-M1

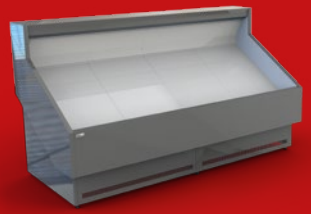

Panama RDP-[module]-03

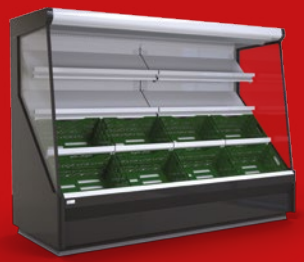

Panama RDP-[module]-07

Parma RDP-[module]-H2

Parma RDP-[module]-L1/H1

Retro Banco RDB-[module]-H3

SEMI VERTICAL
MULTIDECKS

pp. 77-89

Andy RDA-[module]-11/32

Andy RDA-[module]-15/22/23

Andy RDA-[module]-16/17/18

Andy RDA-[module]-24/25

Andy RDA-[module]-13/28

Andy RDA-[module]-26

Elegant RDE-[module]-24

ISLANDS

pp. 93-107

Superstructure

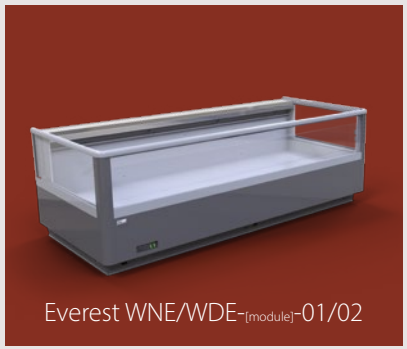

Everest WNE/WDE-[module]-01/02

Everest WNE/WDE-[module]-03

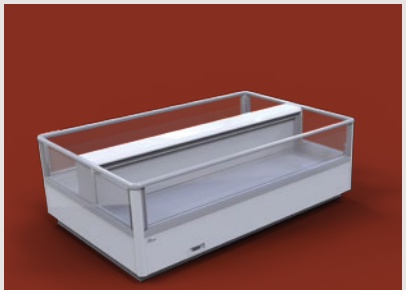

Everest WNE/WDE-[module]-06

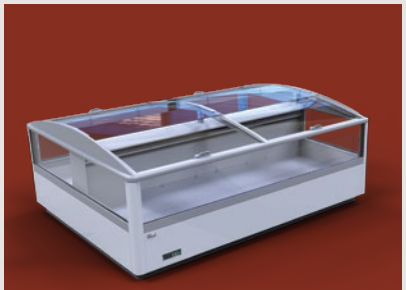

Everest WNE/WDE-[module]-07

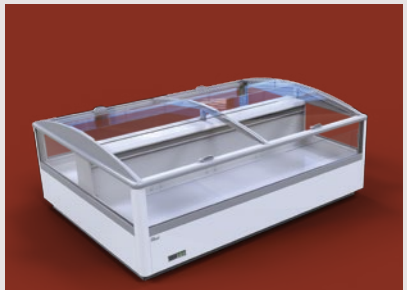

Everest WNE/WDE-[module]-08

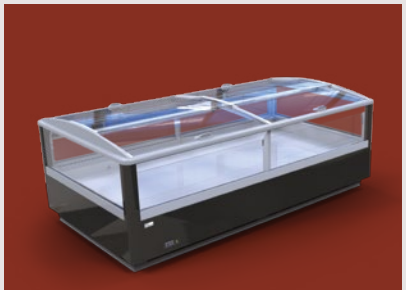

Idea WNI/WDI-[module]-04

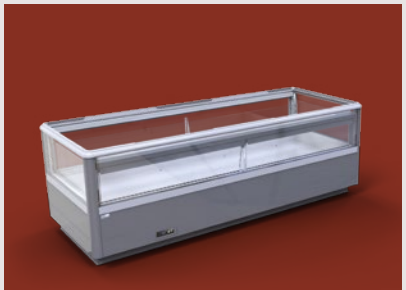

Idea WNI/WDI-[module]-05

CABINETS
and MIX CABINETS

pp. 111-115

Arctic SNA/SDA-[module]-L/H

Mix MNX/MDX-[module]-L1/H1

Mix MNY-[module]-L2/H2

Remote - REFRIGERANTS

	HFO				HFC					FLUID
R744	R455A	R448A	R449A	R450A	R134A	R407F	R410A	R404A	R507	Glycol
NO TIME LIMITS		by 2022 yr						by 2020 yr		NO TIME LIMITS
GLOBAL WARMING POTENTIAL										
1	146	1273	1282	547	1300	1674	1924	3943	3985	

Minimum 100 g and maximum 7300 g – this is the quantity of refrigerant we can use in our equipment. Attention! Proper work of the equipment depends on factors mentioned above. Amount of refrigerant depends on type, model and dimensions of cabinet. For detailed information please contact the Sales Department.

Products shown in the catalogue are just examples and do not constitute an offer as such. The manufacturer reserves the right to alter the features and technical specifications of its products. If it is not clearly defined temperature ranges presented in this document are for shop conditions (20C/50RH).

www.jbg2.com

Office:

E : info@jbg2.com
T : +48 32 494 00 00

JBG-2 Sp. z o.o. ul. Gajowa 5, 43-254 Warszowice

© JBG-2 v.1.2.03.2017